ARM MPU AM438X ePOS EVM

-See the Hardware User Guide for board details
-See the Errata Document for board issues
-See the PCB Build Specification for PCB Details

I2C DEVICES	ADDRESS
I2C0 - TPS65218	0100100 (24H)
I2C0 - CAT24C256W	1010000 (50H)
I2C0 - TLV320AIC3111	0011000 (18H)
I2C0 - CAMERA	0110000 (30H)
I2C0 - TOUCH CONTLR	1011100 (5CH)
I2C2 - TCA5013	0111110 (3EH)
I2C2 - SIL9022A	0111011 (3BH)

I2C POWER MONITOR	
POWER RAIL	ADDRESS
VDD CORE	1000000 (40H)
VDD MPU	1000001 (41H)
VAM438X_DDR	1000010 (42H)
V1_8D_AM438X	1000011 (43H)
V3_3D_AM438X	1000100 (44H)
VDDS_DDR	1000101 (45H)

ARM MPU

Texas Instruments, Inc.
ARM MPU Business Unit
12500 TI Blvd
Dallas, TX 75243

Final

TMDXEVM438X PROC038
Title Page

Size	Document Number	Modified By:	Rev
C	am438x_ePOS_EVM_3k0007_rev1_4a.dsn	Mistral Team	1.4A

Date: Monday, March 06, 2017 Sheet: 1 of 31

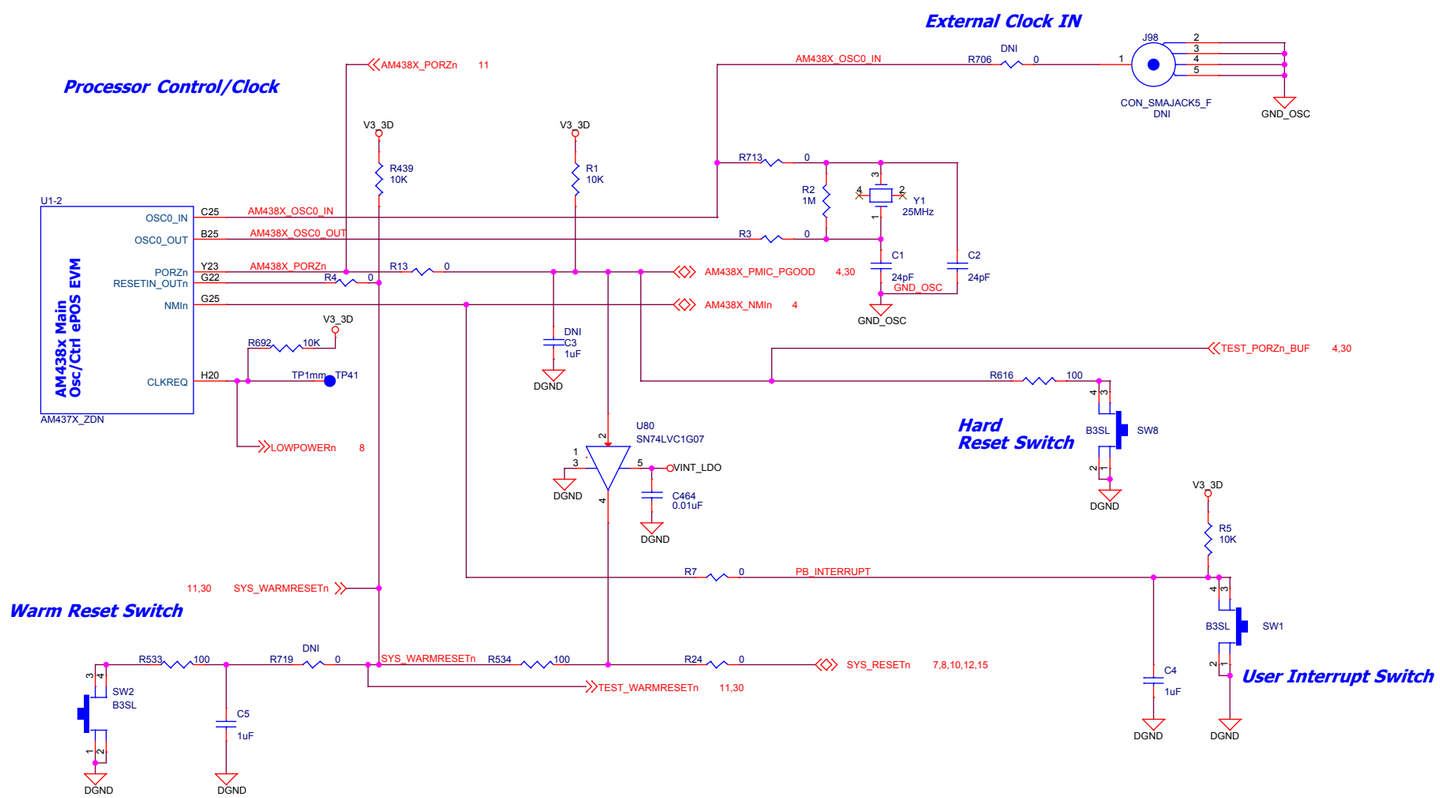

RTC Module - Not used

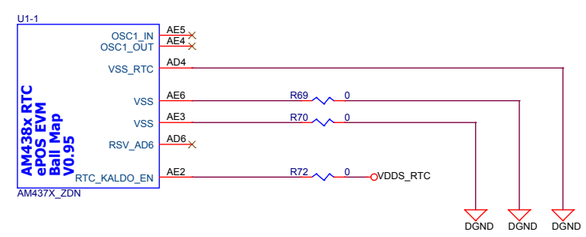

ARM MPU

Texas Instruments, Inc.
ARM MPU Business Unit
12500 TI Blvd
Dallas, TX 75243

Final

TMDXEVM438X PROC038
System Control/Clock & RTC

Size	Document Number	Modified By:	Rev
C	am438x_ePOS_EVM_3k0007_rev1_4a.dsn	Mistral Team	1.4A
Date: Monday, March 06, 2017		Sheet: 2 of 31	

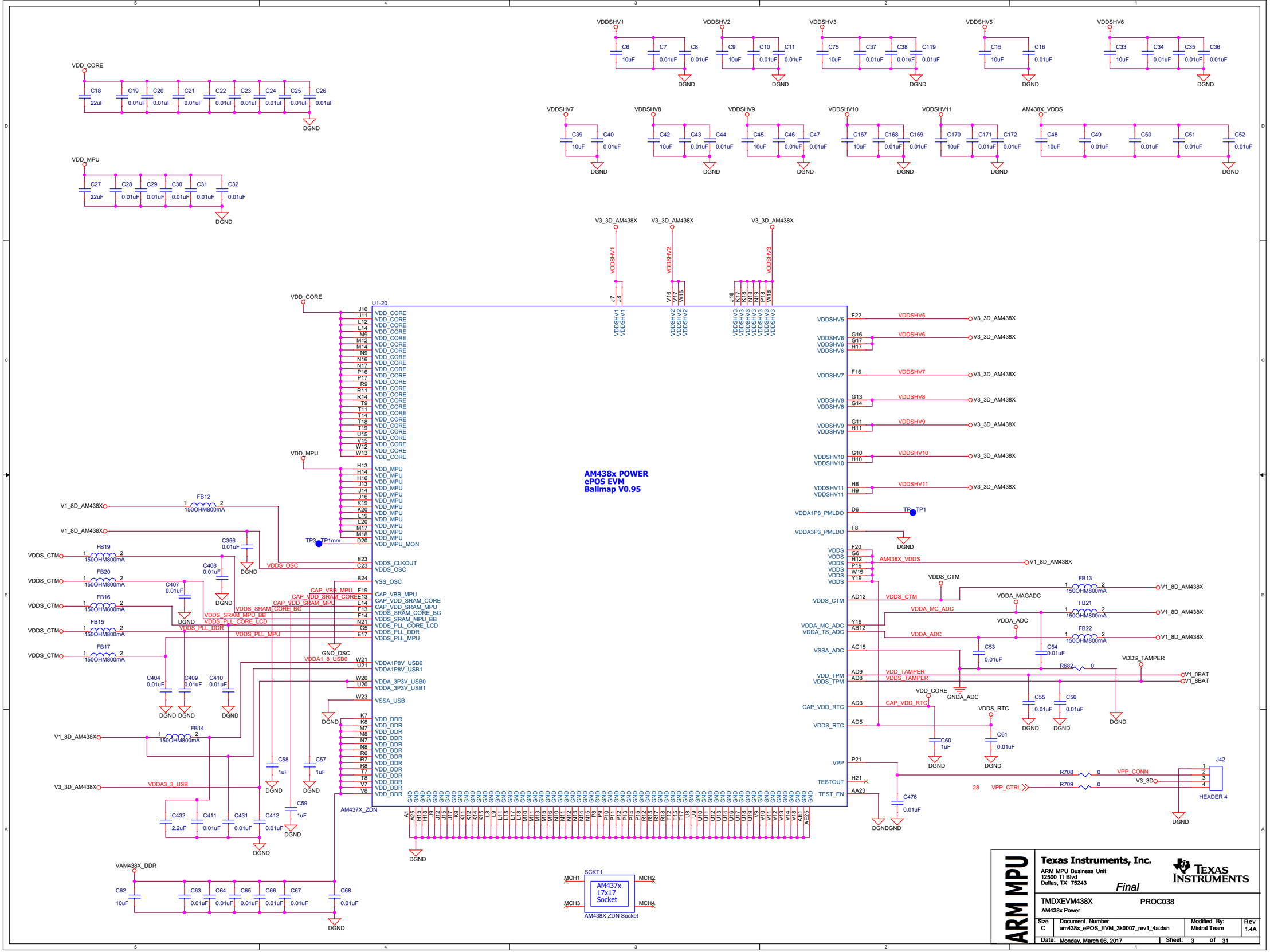
AM438x POWER
ePOS EVM
Ballmap V0.95
VDD_CORE
VDD_MPU
VDDSHV1
VDDSHV2
VDDSHV3
VDDSHV5
VDDSHV6
VDDSHV7
VDDSHV8
VDDSHV9
VDDSHV10
VDDSHV11
AM438X_VDDS
V3_3D_AM438X
V1_8D_AM438X
V1_0BAT
V1_8BAT
VDDS_CTM
VDDS_OSC
VDDS_SRAM_MPU_BB
VDDS_SRAM_CORE_BG
VDDS_PLL_CORE_LCD
VDDS_PLL_DDR
VDDS_PLL_MPU
VDDA1_8_USB0
VDDA3_3_USB
VDDS_TAMPER
VPP_CONN
VPP_CTRL
VAM438X_DDR
U1-20
AM437X_ZDN
HEADER 4
AM437x 17x17 Socket
AM438X ZDN Socket
Texas Instruments, Inc.
ARM MPU Business Unit
12500 TI Blvd
Dallas, TX 75243
Final
ARM MPU
TMDXEVM438X
PROC038
AM438x Power
Size C
Document Number am438x_ePOS_EVM_3k0007_rev1_4a.dsn
Modified By: Mistral Team
Rev 1.4A
Date: Monday, March 06, 2017
Sheet: 3 of 31

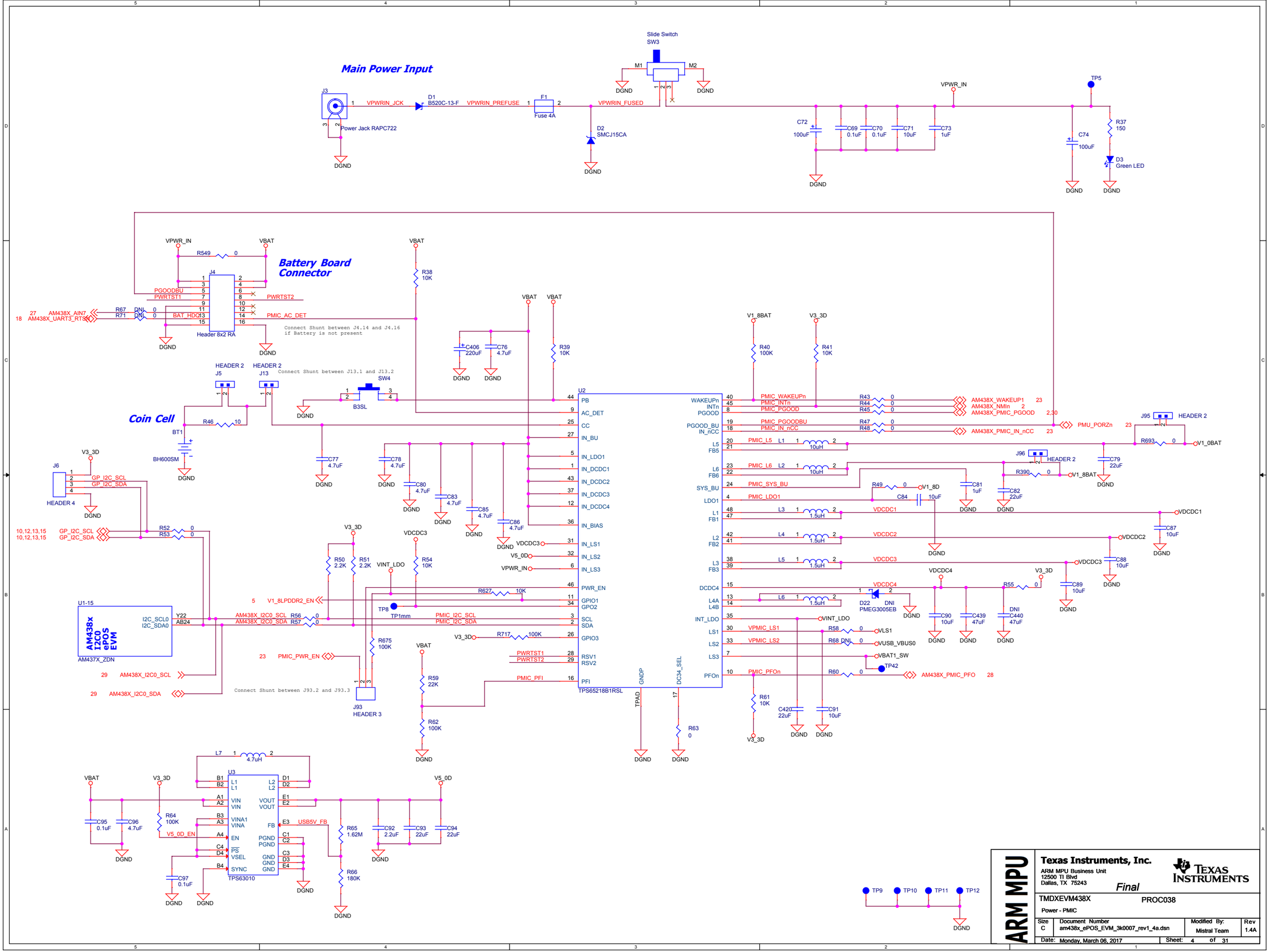
Main Power Input
Slide Switch
SW3
J3
Power Jack RAPC722
VPWRIN_JCK
D1
B520C-13-F
VPWRIN_PREFUSE
F1
Fuse 4A
VPWRIN_FUSED
D2
SMCJ15CA
VPWR_IN
TP5
R37
150
D3
Green LED
C72
100uF
C69
0.1uF
C70
0.1uF
C71
10uF
C73
1uF
C74
100uF
DGND
Battery Board Connector
J4
Header 8x2 RA
PGOODBU
PWRTST1
PWRTST2
PMIC_AC_DET
AM438X_AIN7
AM438X_UART3_RTSn
BAT_HDQ
Connect Shunt between J4.14 and J4.16 if Battery is not present
R549
R38
10K
R39
10K
C406
220uF
C76
4.7uF
Coin Cell
BT1
BH600SM
HEADER 2
J5
J13
Connect Shunt between J13.1 and J13.2
SW4
B3SL
R46
10
C77
4.7uF
C78
4.7uF
C80
4.7uF
C83
4.7uF
C85
4.7uF
C86
4.7uF
J6
HEADER 4
GP_I2C_SCL
GP_I2C_SDA
R52
R53
U1-15
AM438x
I2C0
ePOS
EVM
AM437X_ZDN
I2C_SCL0
I2C_SDA0
AM438X_I2C0_SCL
AM438X_I2C0_SDA
R50
2.2K
R51
2.2K
VINT_LDO
R54
10K
VDCDC3
V1_8LPDDR2_EN
TP8
TP1mm
R627
10K
R675
100K
PMIC_PWR_EN
R717
100K
R59
22K
R62
100K
J93
HEADER 3
Connect Shunt between J93.2 and J93.3
PMIC_PFI
U2
TPS65218B1RSL
PB
AC_DET
CC
IN_BU
IN_LDO1
IN_DCDC1
IN_DCDC2
IN_DCDC3
IN_DCDC4
IN_BIAS
IN_LS1
IN_LS2
IN_LS3
PWR_EN
GPIO1
GPO2
SCL
SDA
GPIO3
RSV1
RSV2
PFI
GNDP
TPAD
DC34_SEL
WAKEUPn
INTn
PGOOD
PGOOD_BU
IN_nCC
L5
FB5
L6
FB6
SYS_BU
LDO1
L1
FB1
L2
FB2
L3
FB3
DCDC4
L4A
L4B
INT_LDO
LS1
LS2
LS3
PFOn
PMIC_WAKEUPn
PMIC_INTn
PMIC_PGOOD
PMIC_PGOODBU
PMIC_IN_nCC
PMIC_L5
PMIC_L6
PMIC_SYS_BU
PMIC_LDO1
VDCDC1
VDCDC2
VDCDC3
VDCDC4
VPMIC_LS1
VPMIC_LS2
PMIC_PFOn
AM438X_WAKEUP1
AM438X_NMIn
AM438X_PMIC_PGOOD
AM438X_PMIC_IN_nCC
PMU_PORZn
AM438X_PMIC_PFO
R40
100K
R41
10K
R43
R44
R45
R47
R48
L1
10uH
L2
10uH
L3
1.5uH
L4
1.5uH
L5
1.5uH
L6
1.5uH
J95
HEADER 2
R693
V1_0BAT
J96
HEADER 2
R390
V1_8BAT
C79
22uF
C81
1uF
C82
22uF
R49
V1_8D
C84
10uF
C87
10uF
C88
10uF
C89
10uF
R55
D22
PMEG3005EB
DNI
C90
10uF
C439
47uF
C440
47uF
R58
VLS1
R68
VUSB_VBUS0
VBAT1_SW
TP42
R60
R61
10K
C420
22uF
C91
10uF
R63
0
L7
4.7uH
U3
TPS63010
VIN
VINA1
VINA
EN
PS
VSEL
SYNC
VOUT
FB
PGND
GND
V5_0D_EN
USB5V_FB
C95
0.1uF
C96
4.7uF
R64
100K
C97
0.1uF
R65
1.62M
R66
180K
C92
2.2uF
C93
22uF
C94
22uF
V5_0D
TP9
TP10
TP11
TP12
ARM MPU
Texas Instruments, Inc.
ARM MPU Business Unit
12500 TI Blvd
Dallas, TX 75243
Final
TMDXEVM438X
PROC038
Power - PMIC
Size C
Document Number am438x_ePOS_EVM_3k0007_rev1_4a.dsn
Modified By: Mistral Team
Rev 1.4A
Date: Monday, March 06, 2017
Sheet: 4 of 31

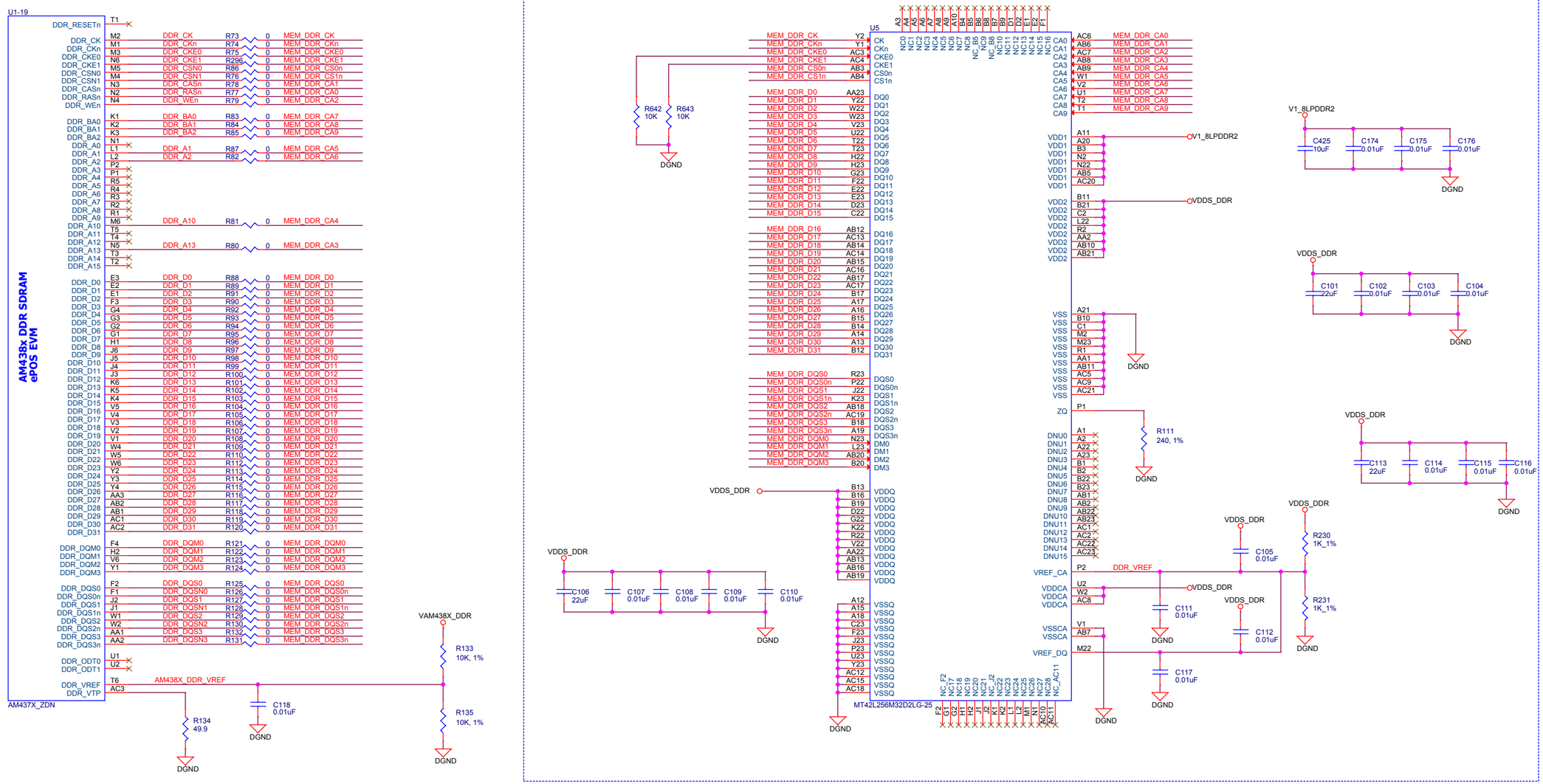

ARM MPU

Texas Instruments, Inc.
ARM MPU Business Unit
12500 TI Blvd
Dallas, TX 75243

Final

TMDXEVM438X PROC038

LPDDR2 Memory

Size	Document Number	Modified By:	Rev
C	am438x_ePOS_EVM_3k0007_rev1_4a.dsn	Mistral Team	1.4A

Date: Monday, March 06, 2017 Sheet: 5 of 31

NAND Memory

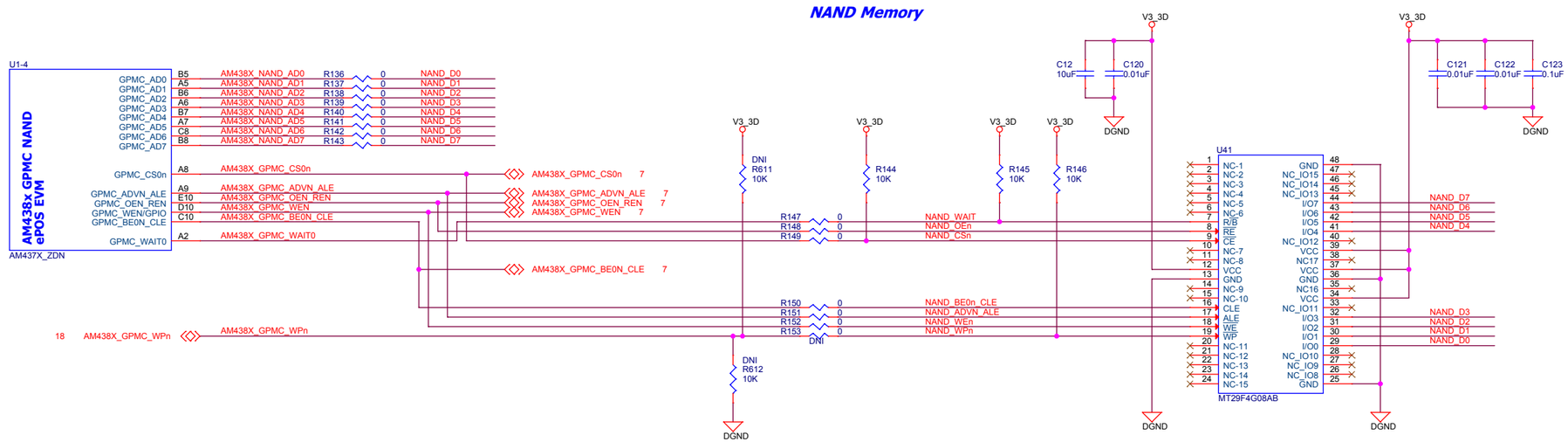

ARM MPU

Texas Instruments, Inc.
ARM MPU Business Unit
12500 TI Blvd
Dallas, TX 75243

Final

TMDXEVM438X
NAND Flash Memory

PROC038

Size	Document Number	Modified By:	Rev
C	am438x_ePOS_EVM_3k0007_rev1_4a.dsn	Mistral Team	1.4A

Date: Monday, March 06, 2017 Sheet: 6 of 31

QSPI Interface

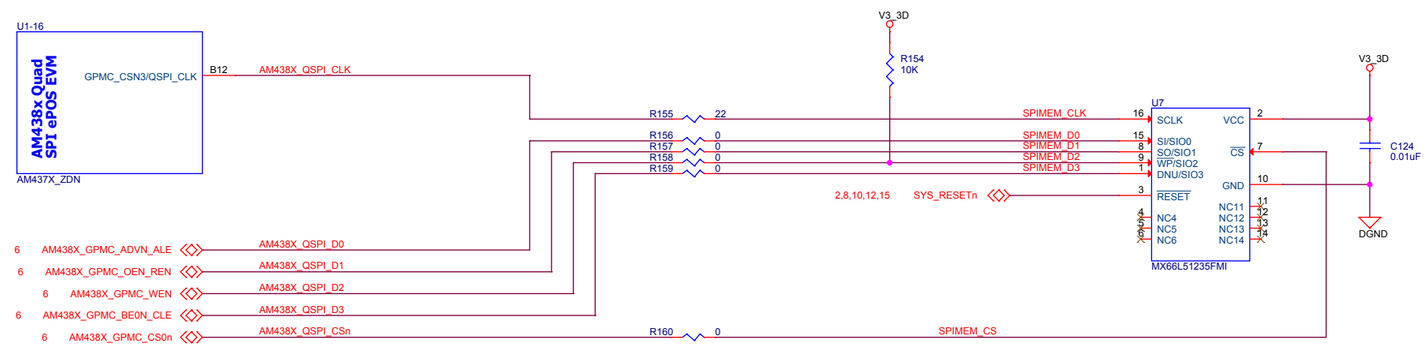

ARM MPU

Texas Instruments, Inc.
ARM MPU Business Unit
12500 TI Blvd
Dallas, TX 75243

Final

TEXAS INSTRUMENTS

TMDXEVM438X PROC038

QSPI Interface - Flash Memory

Size	Document Number	Modified By:	Rev
C	am438x_ePOS_EVM_3k0007_rev1_4a.dsn	Mistral Team	1.4A

Date: Monday, March 06, 2017 Sheet: 7 of 31

Ethernet

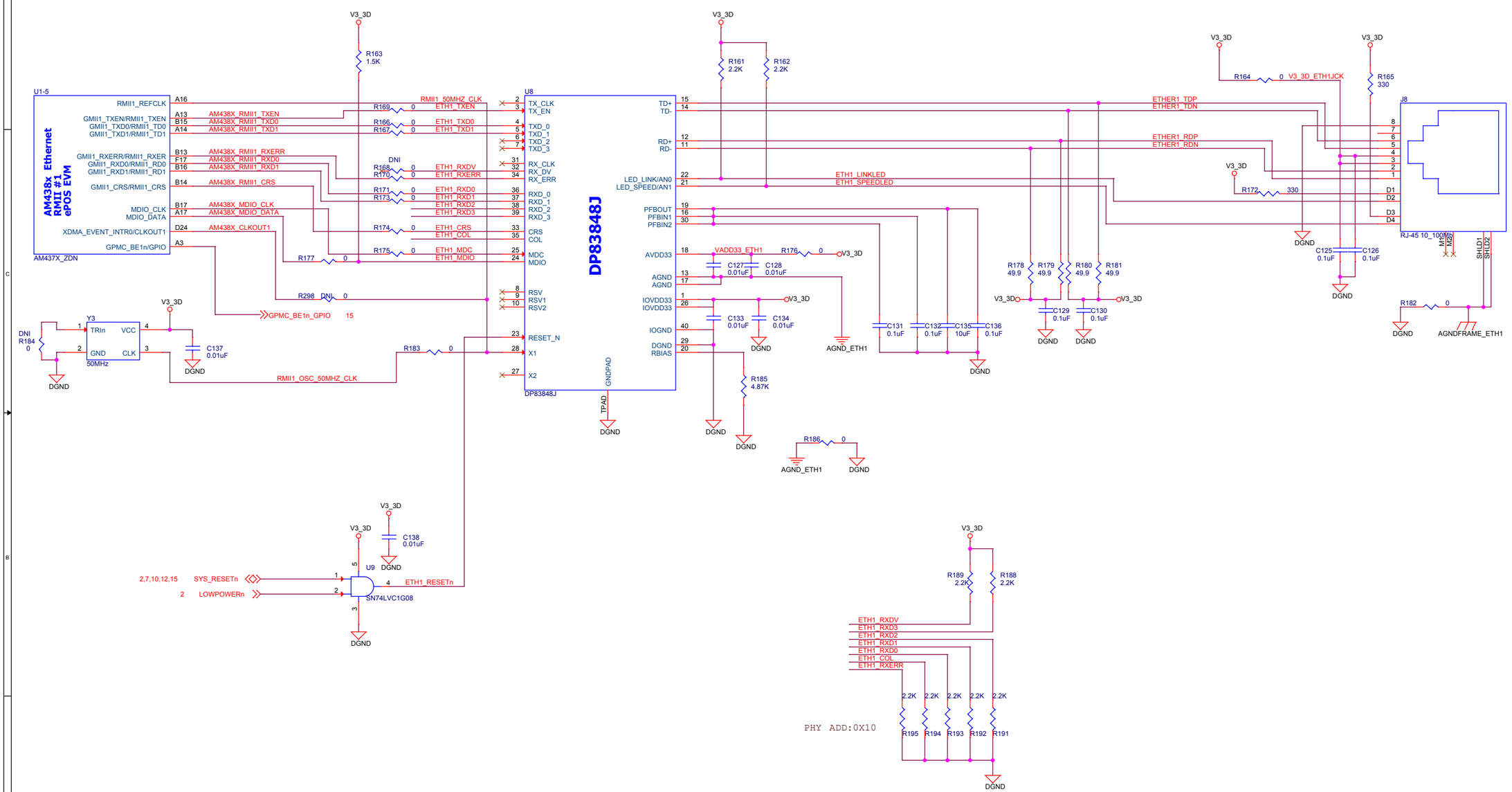

ARM MPU	Texas Instruments, Inc. ARM MPU Business Unit 12500 TI Blvd Dallas, TX 75243 Final
TMDXEVM438X Ethernet 10/100Mb RMII	PROC038
Size: C	Document Number: am438x_ePOS_EVM_3k0007_rev1_4a.dsn
Modified By: Mistral Team	Rev: 1.4A
Date: Monday, March 06, 2017	Sheet: 8 of 31

SD/MMC0 Connector

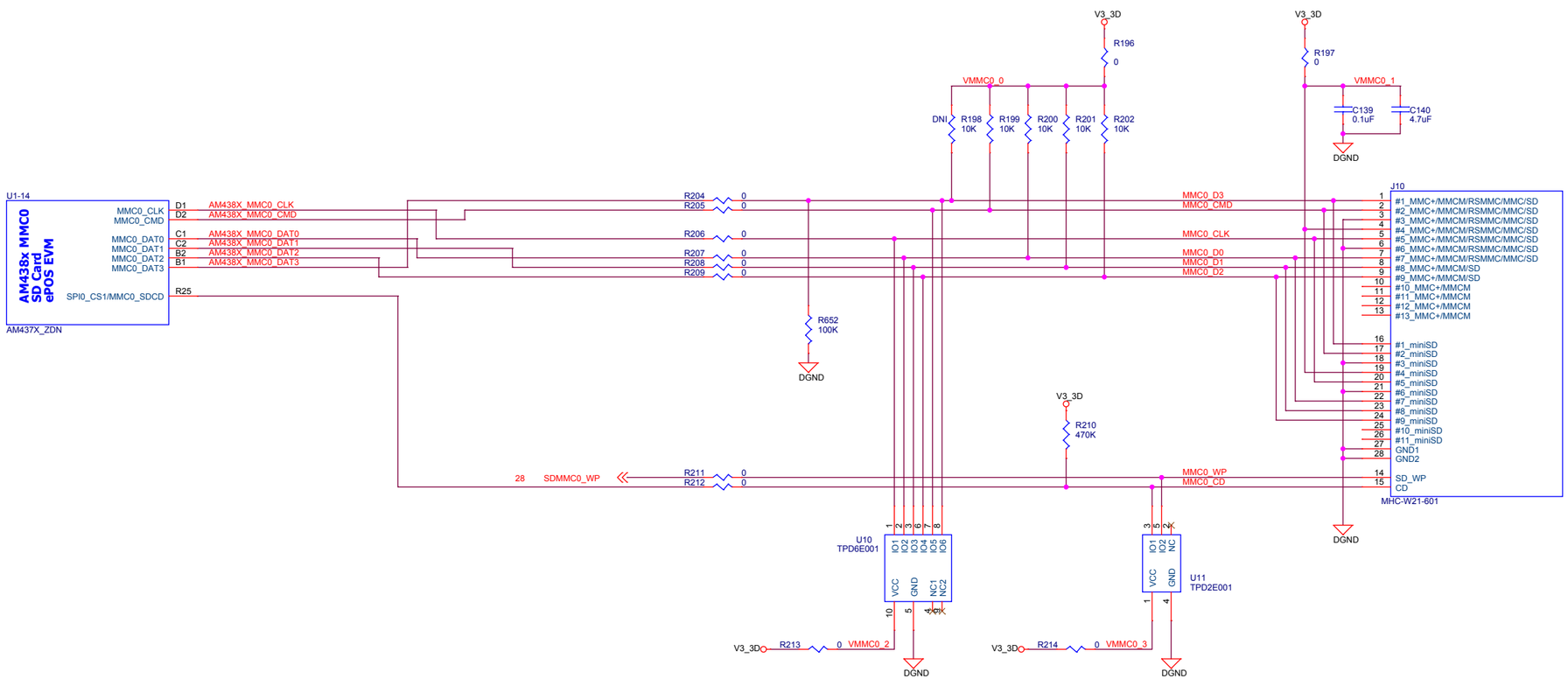

ARM MPU

Texas Instruments, Inc.
ARM MPU Business Unit
12500 TI Blvd
Dallas, TX 75243

Final

TEXAS INSTRUMENTS

TMDXEVM438X PROC038
SDMMC #0 Interface

Size	Document Number	Modified By:	Rev
C	am438x_ePOS_EVM_3k0007_rev1_4a.dsn	Mistral Team	1.4A

Date: Monday, March 06, 2017 Sheet: 9 of 31

ID Memory

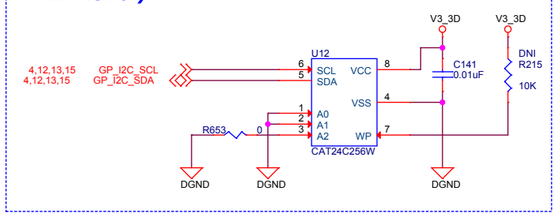

ARM JTAG Connector

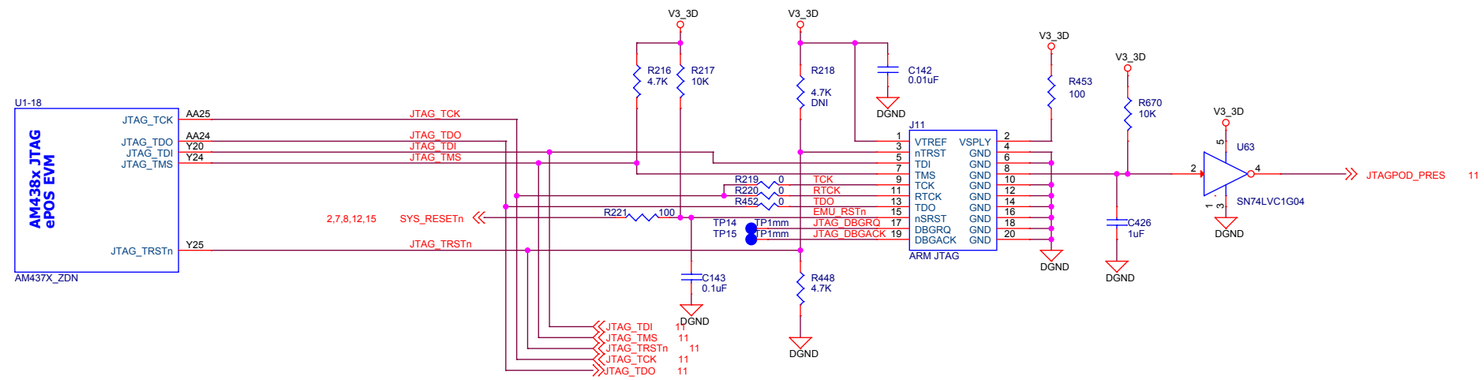

AM438x Boot Configuration

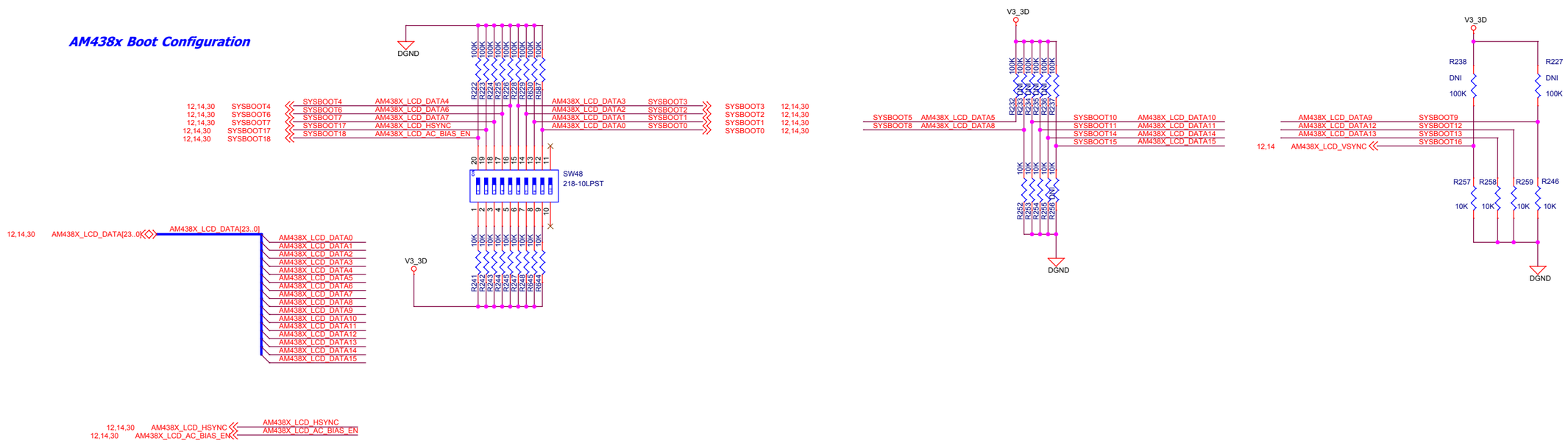

ARM MPU

Texas Instruments, Inc.
ARM MPU Business Unit
12500 TI Blvd
Dallas, TX 75243

Final

TEXAS INSTRUMENTS

TMDXEVM438X PROC038

Debug/Configuration

Size	Document Number	Modified By:	Rev
C	am438x_ePOS_EVM_3k0007_rev1_4a.dsn	Mistral Team	1.4A

Date: Wednesday, January 18, 2017 Sheet: 10 of 31

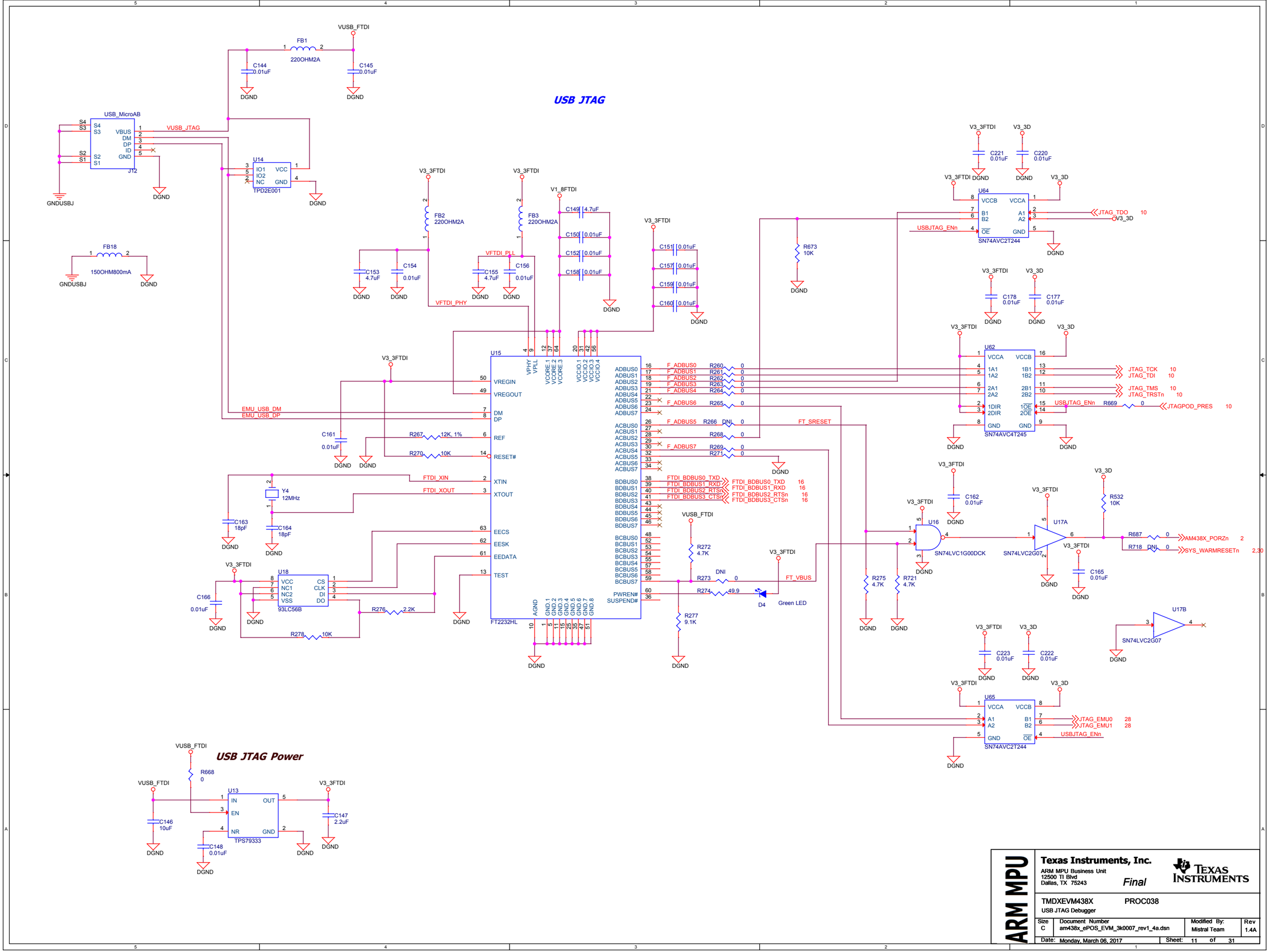

ARM MPU

Texas Instruments, Inc.
ARM MPU Business Unit
12500 TI Blvd
Dallas, TX 75243

Final

TEXAS INSTRUMENTS

TMDXEVM438X PROC038
USB JTAG Debugger

Size	Document Number	Modified By:	Rev
C	am438x_ePOS_EVM_3k0007_rev1_4a.dsn	Mistral Team	1.4A

Date: Monday, March 06, 2017 Sheet: 11 of 31

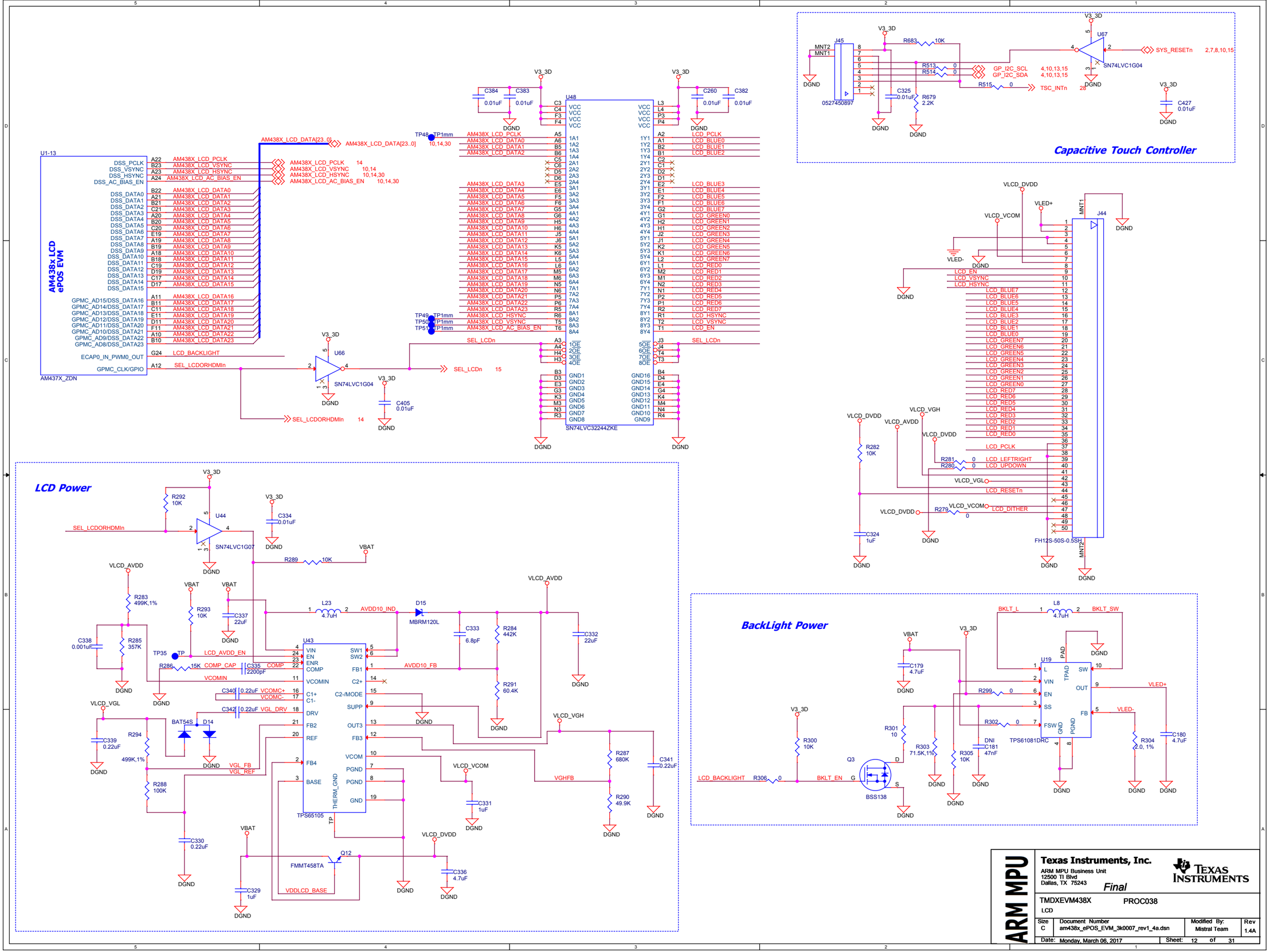
AM438x LCD ePOS EVM
U1-13
AM437X_ZDN
U48
SN74LVC32244ZKE
U66
SN74LVC1G04
Capacitive Touch Controller
U67
SN74LVC1G04
J45
0527450897
J44
FH12S-50S-0.5SH
LCD Power
U44
SN74LVC1G07
U43
TPS65105
D15
MBRM120L
Q12
FMMT458TA
BackLight Power
U19
TPS61081DRC
Q3
BSS138
Texas Instruments, Inc.
ARM MPU Business Unit
12500 TI Blvd
Dallas, TX 75243
Final
TMDXEVM438X
PROC038
LCD
Size C
Document Number am438x_ePOS_EVM_3k0007_rev1_4a.dsn
Modified By: Mistral Team
Rev 1.4A
Date: Monday, March 06, 2017
Sheet: 12 of 31

Camera Interface

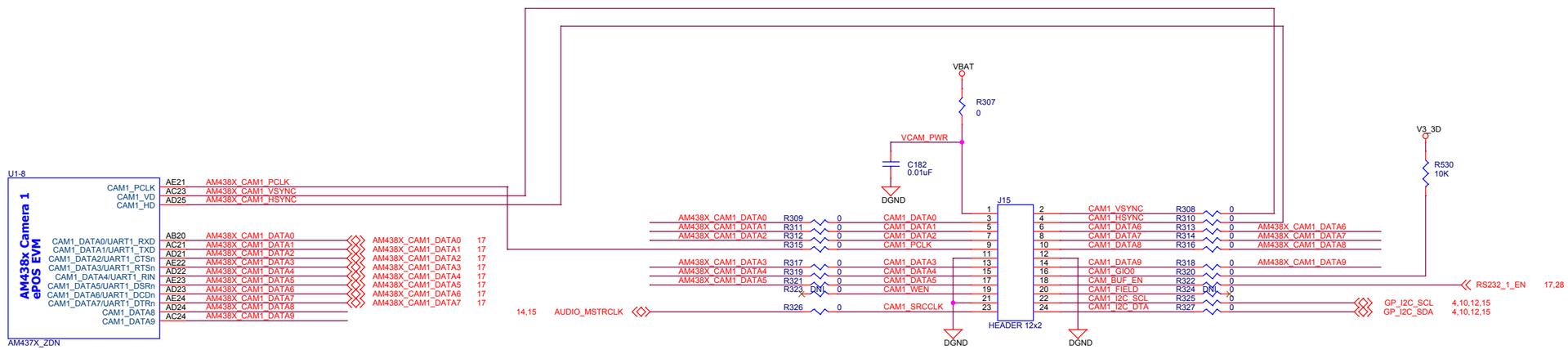

ARM MPU

Texas Instruments, Inc.
ARM MPU Business Unit
12500 TI Blvd
Dallas, TX 75243

Final

TEXAS INSTRUMENTS

TMDXEVM438X PROC038
Camera Interface

Size	Document Number	Modified By:	Rev
C	am438x_ePOS_EVM_3k0007_rev1_4a.dsn	Mistral Team	1.4A

Date: Monday, March 06, 2017 Sheet: 13 of 31

HDMI Interface

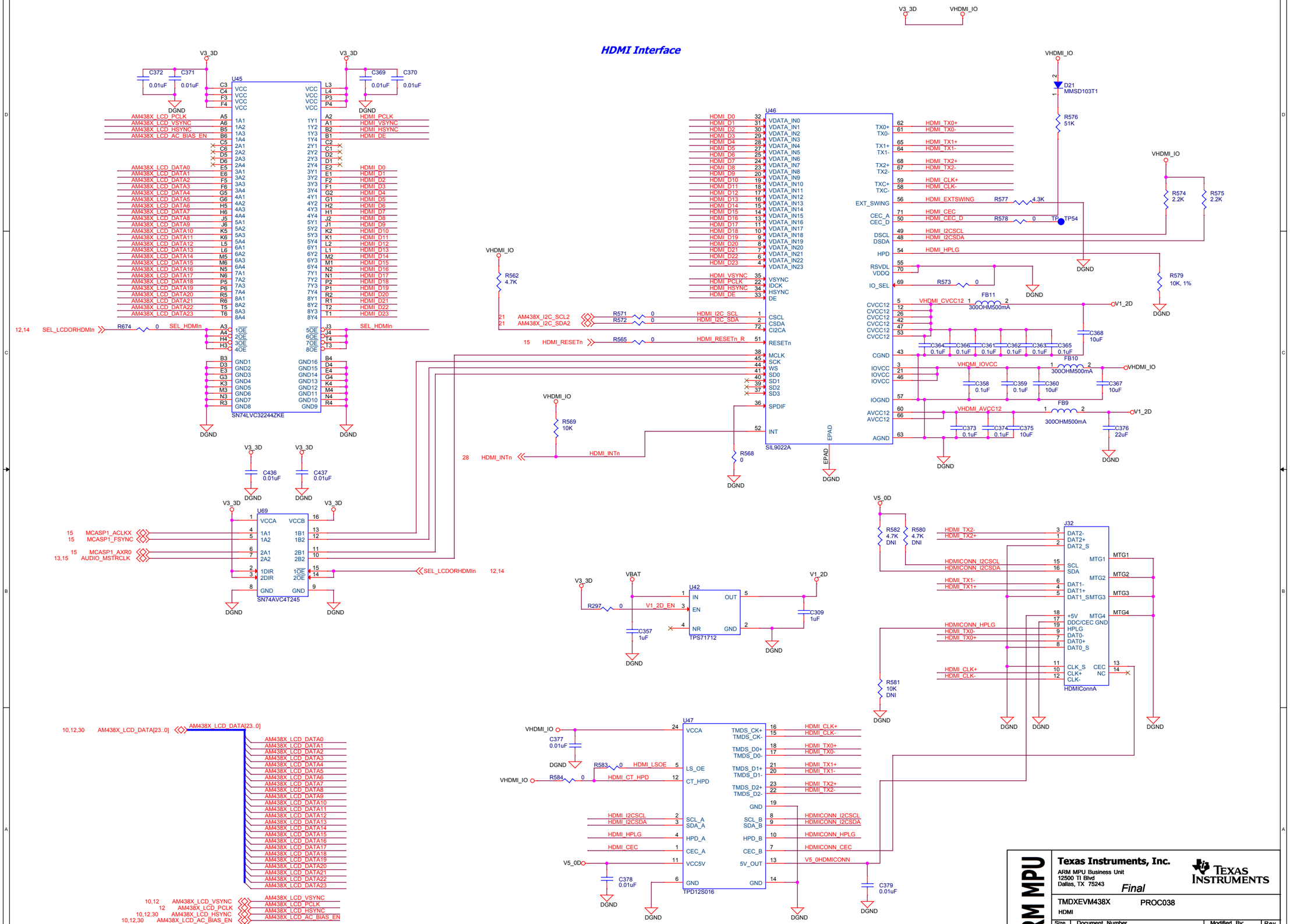

Texas Instruments, Inc.
ARM MPU Business Unit
12500 TI Blvd
Dallas, TX 75243

Final

TMDXEVM438X PROC038
HDMI

Size	Document Number	Modified By:	Rev
C	am438x_ePOS_EVM_3k0007_rev1_4a.dsn	Mistral Team	1.4A

Date: Monday, March 06, 2017 Sheet: 14 of 31

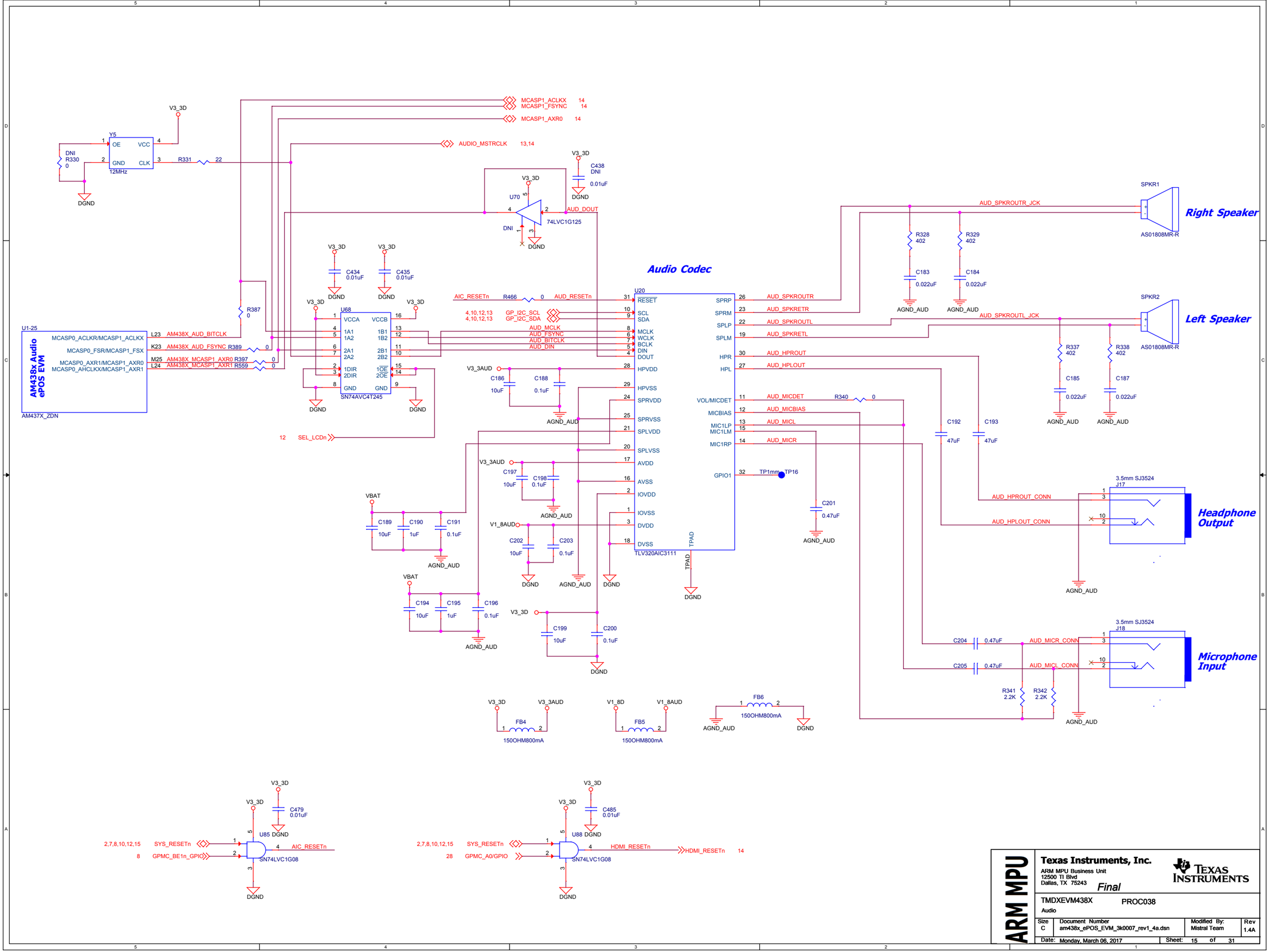
Audio Codec
Right Speaker
Left Speaker
Headphone Output
Microphone Input
AM438x Audio ePOS EVM
U20
TLV320AIC3111
U68
SN74AVC4T245
U70
74LVC1G125
U85
SN74LVC1G08
U88
SN74LVC1G08
SPKR1
SPKR2
AS01808MR-R
J17
J18
3.5mm SJ3524
Texas Instruments, Inc.
ARM MPU Business Unit
12500 TI Blvd
Dallas, TX 75243
Final
TMDXEVM438X
PROC038
Audio
ARM MPU
Size C
Document Number am438x_ePOS_EVM_3k0007_rev1_4a.dsn
Modified By: Mistral Team
Rev 1.4A
Date: Monday, March 06, 2017
Sheet: 15 of 31

UART #0 RS-232

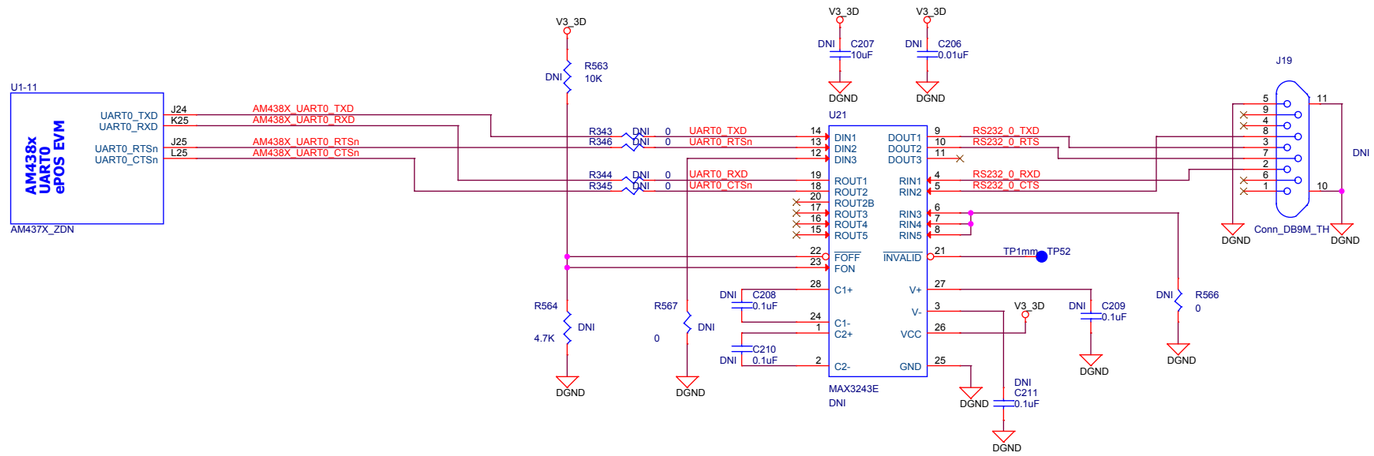

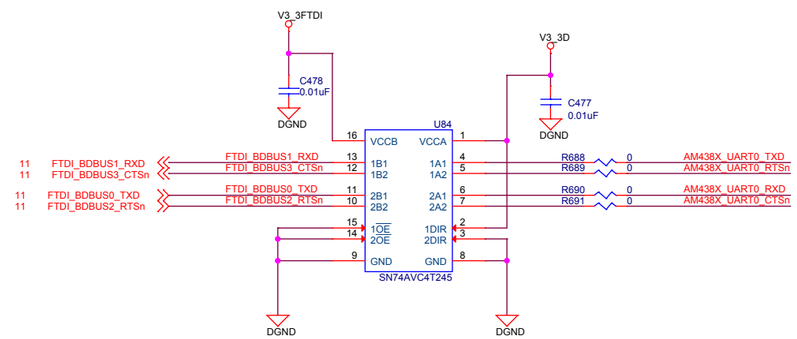

ARM MPU

Texas Instruments, Inc.
ARM MPU Business Unit
12500 TI Blvd
Dallas, TX 75243

Final

TEXAS INSTRUMENTS

TMDXEVM438X PROC038

UART #0 RS-232

Size	Document Number	Modified By:	Rev
C	am438x_ePOS_EVM_3k0007_rev1_4a.dsn	Mistral Team	1.4A

Date: Monday, March 06, 2017 Sheet: 16 of 31

UART #1 RS-232

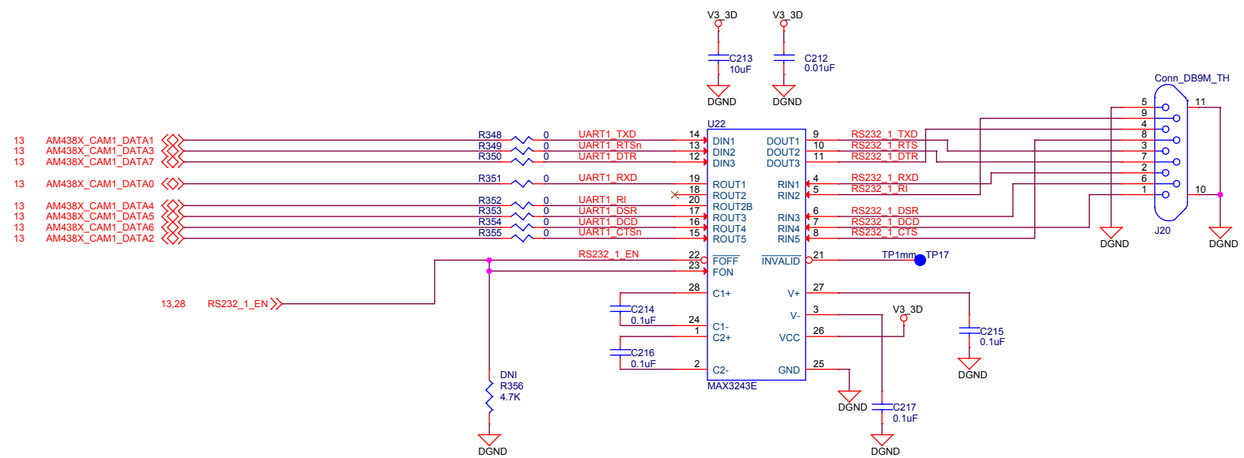

ARM MPU

Texas Instruments, Inc.
ARM MPU Business Unit
12500 TI Blvd
Dallas, TX 75243

Final

TEXAS INSTRUMENTS

TMDXEVM438X PROC038
UART #1 RS-232

Size	Document Number	Modified By:	Rev
C	am438x_ePOS_EVM_3k0007_rev1_4a.dsn	Mistral Team	1.4A

Date Monday, March 06, 2017 Sheet: 17 of 31

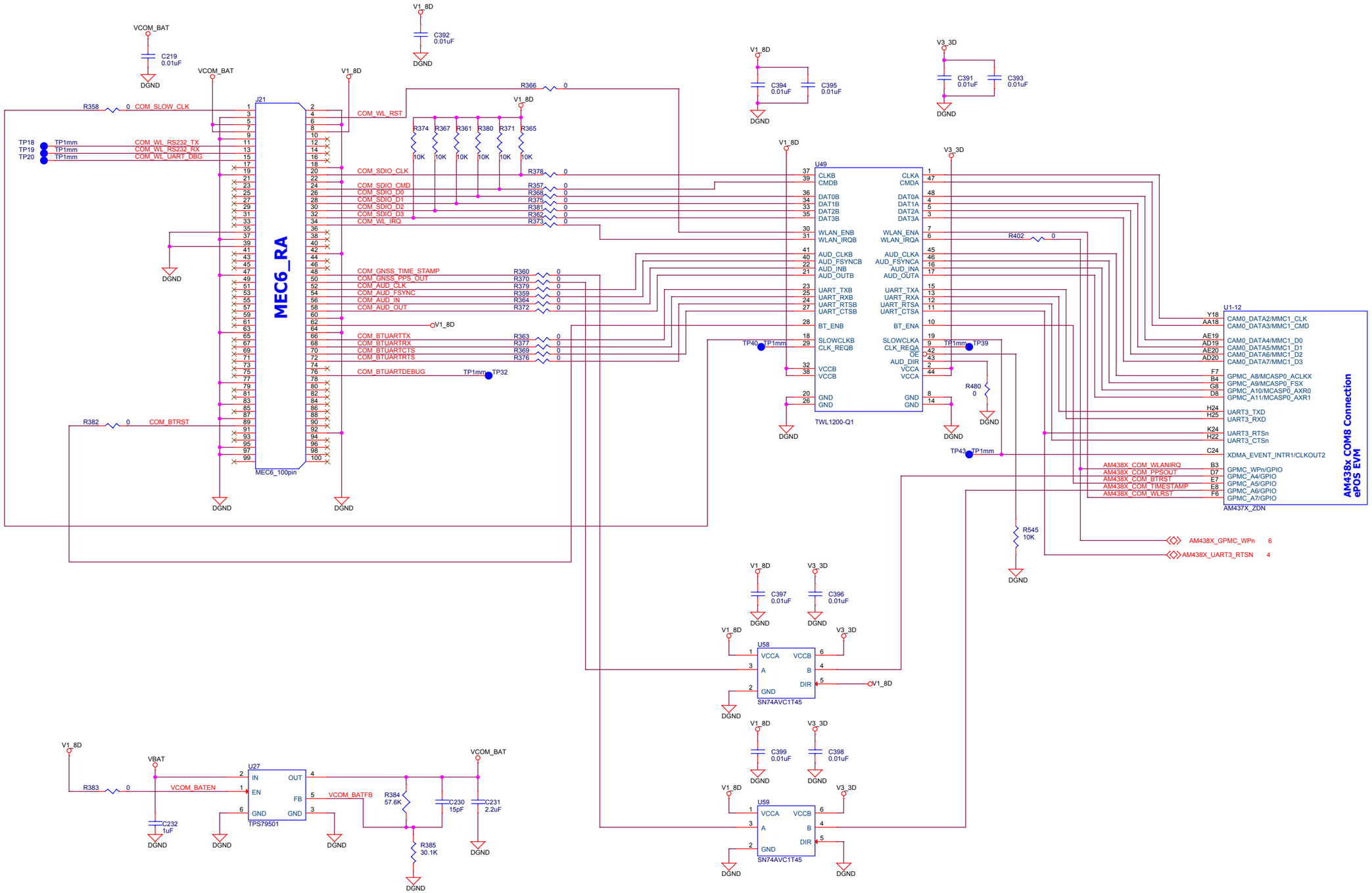

ARM MPU

Texas Instruments, Inc.
ARM MPU Business Unit
12500 TI Blvd
Dallas, TX 75243

Final

TEXAS INSTRUMENTS

TMDXEVM438X PROC038

WLAN/BT COM8 Interface

Size	Document Number	Modified By:	Rev
C	am438x_ePOS_EVM_3k0007_rev1_4a.dsn	Mistral Team	1.4A

Date: Monday, March 06, 2017 Sheet: 18 of 31

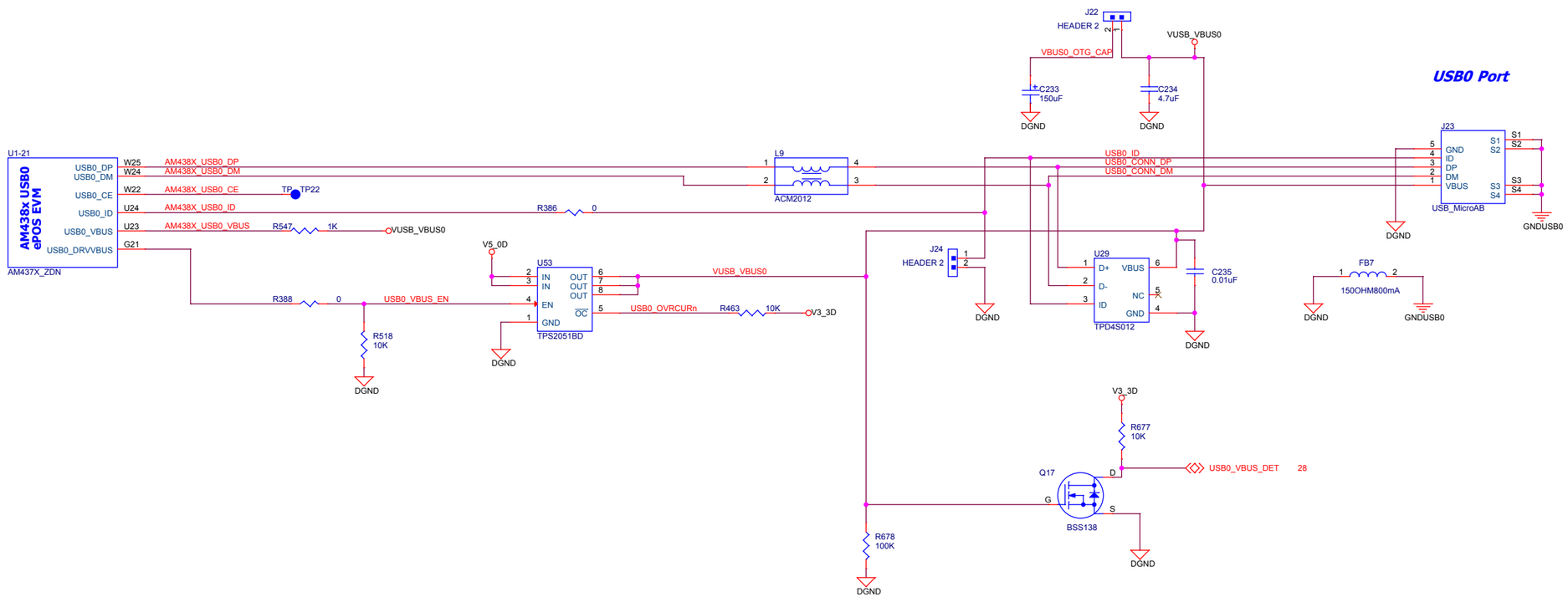

ARM MPU

Texas Instruments, Inc.

ARM MPU Business Unit
12500 TI Blvd
Dallas, TX 75243

Final

TEXAS INSTRUMENTS

TMDXEVM438X PROC038

USB #0

Size	Document Number	Modified By:	Rev
C	am438x_ePOS_EVM_3k0007_rev1_4a.dsn	Mistral Team	1.4A

Date: Monday, March 06, 2017 Sheet: 19 of 31

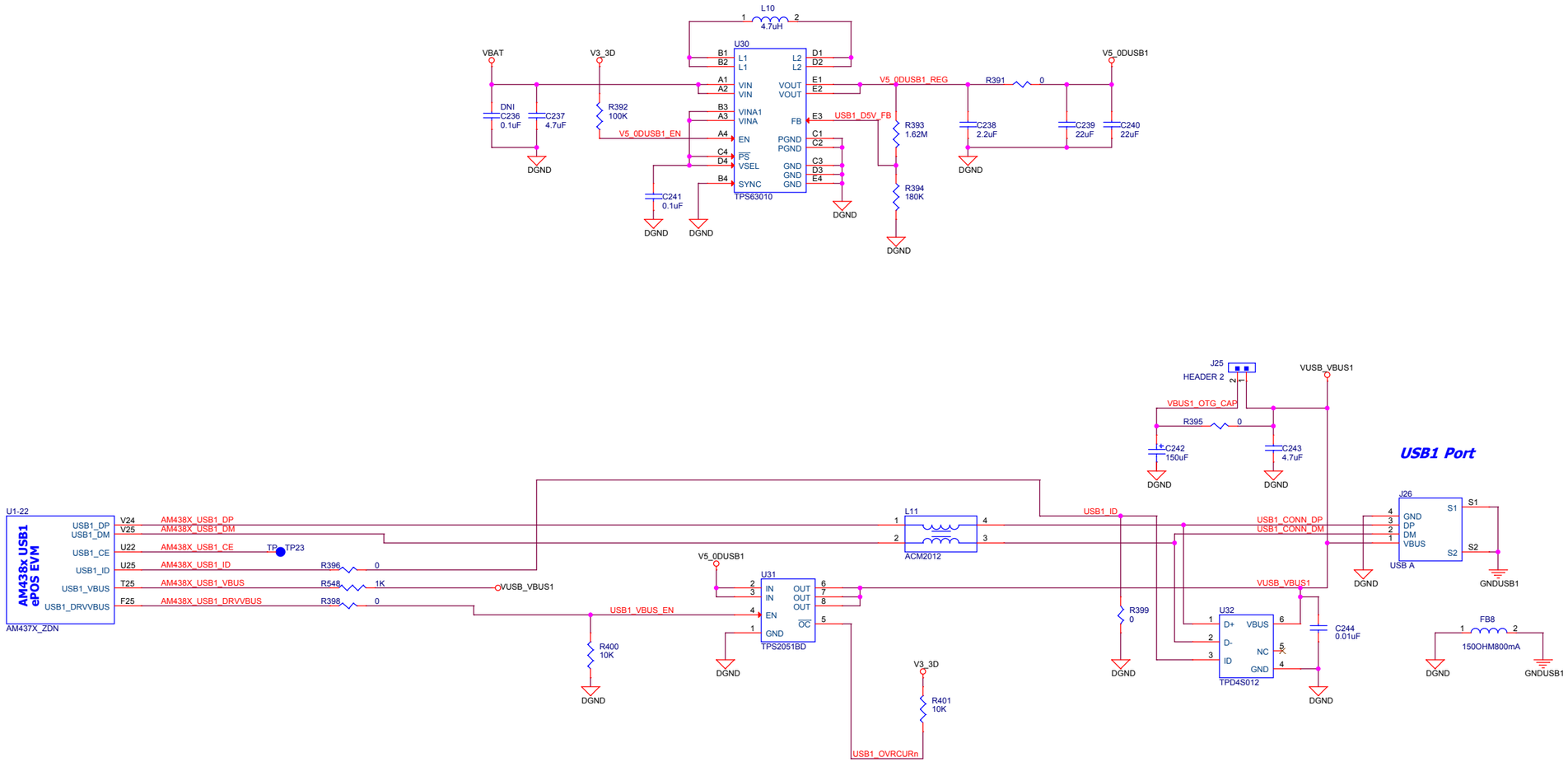

ARM MPU

Texas Instruments, Inc.
ARM MPU Business Unit
12500 TI Blvd
Dallas, TX 75243

Final

TEXAS INSTRUMENTS

TMDXEVM438X PROC038

USB #1

Size	Document Number	Modified By:	Rev
C	am438x_ePOS_EVM_3k0007_rev1_4a.dsn	Mistral Team	1.4A

Date: Monday, March 06, 2017 Sheet: 20 of 31

SmartCard Interface

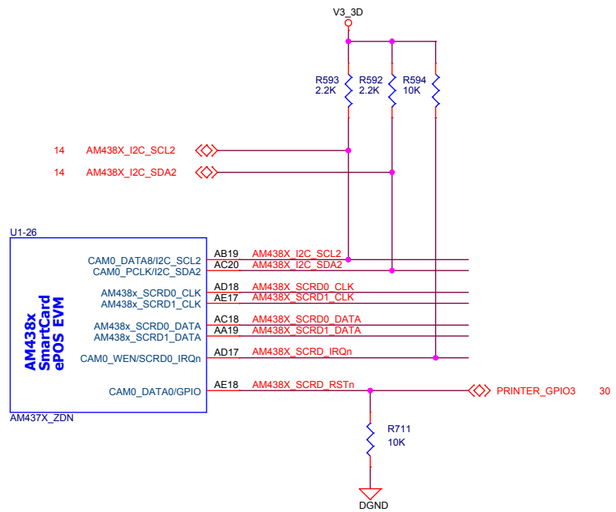

Smart Card Connector

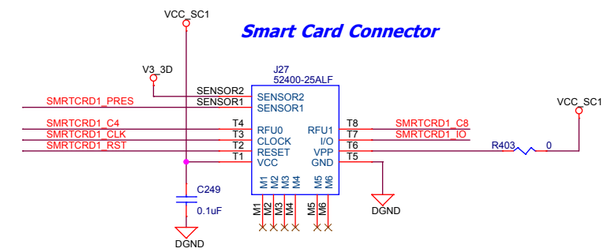

SAM Card 0 Connector

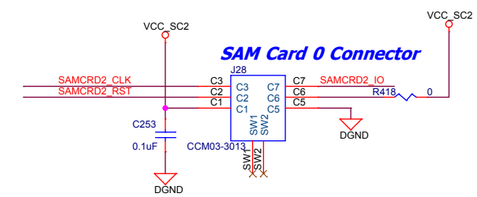

SAM Card 1 Connector

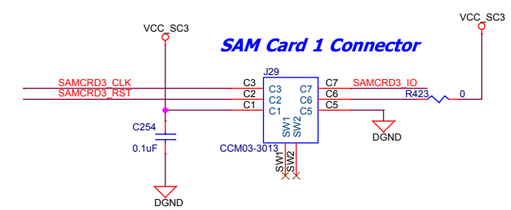

SAM Card 2 Connector

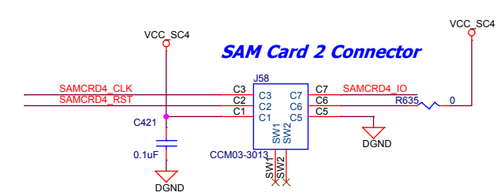

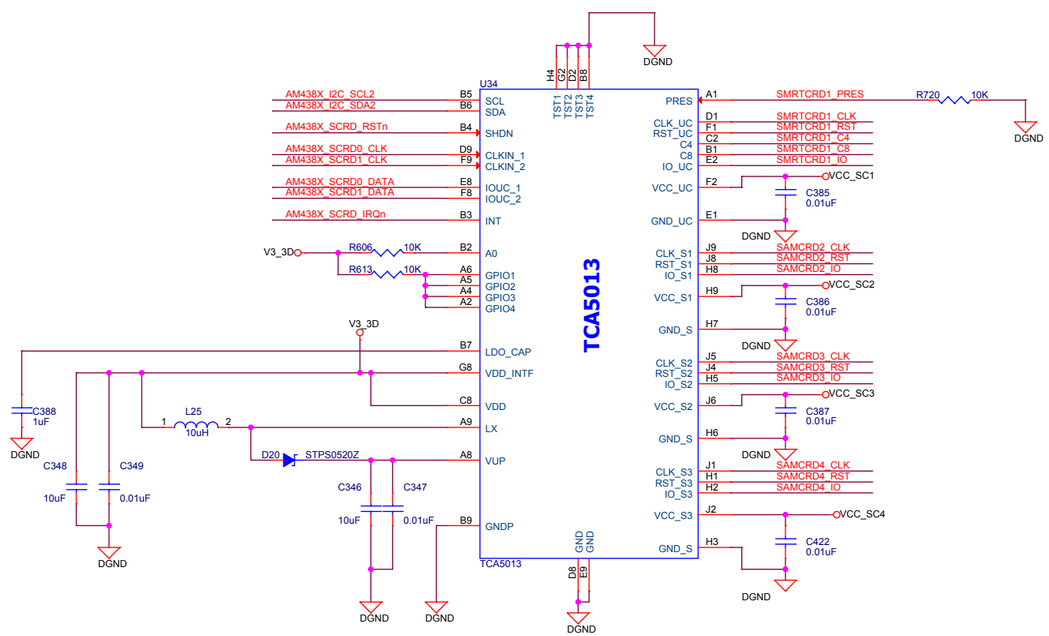

Texas Instruments, Inc.
ARM MPU Business Unit
12500 TI Blvd
Dallas, TX 75243

Final

TEXAS INSTRUMENTS

ARM MPU

TMDXEVM438X

SmartCard Interface

PROC038

Size	Document Number	Modified By:	Rev
C	am438x_ePOS_EVM_3k0007_rev1_4a.dsn	Mistral Team	1.4A

Date: Monday, March 06, 2017 Sheet: 21 of 31

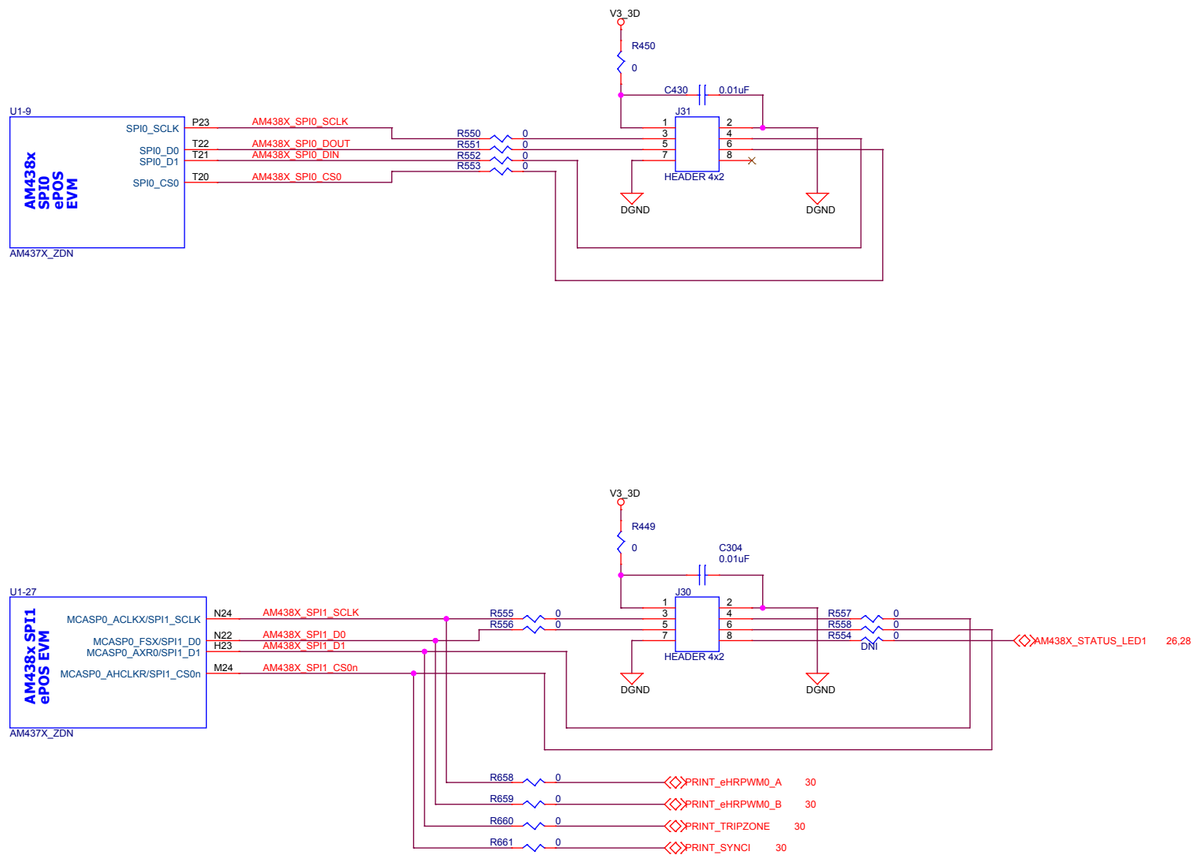

ARM MPU

Texas Instruments, Inc.
ARM MPU Business Unit
12500 TI Blvd
Dallas, TX 75243

Final

TEXAS INSTRUMENTS

TMDXEVM438X PROC038
SPI Connections

Size	Document Number	Modified By:	Rev
C	am438x_ePOS_EVM_3k0007_rev1_4a.dsn	Mistral Team	1.4A

Date: Monday, March 06, 2017 Sheet: 22 of 31

External Clock IN

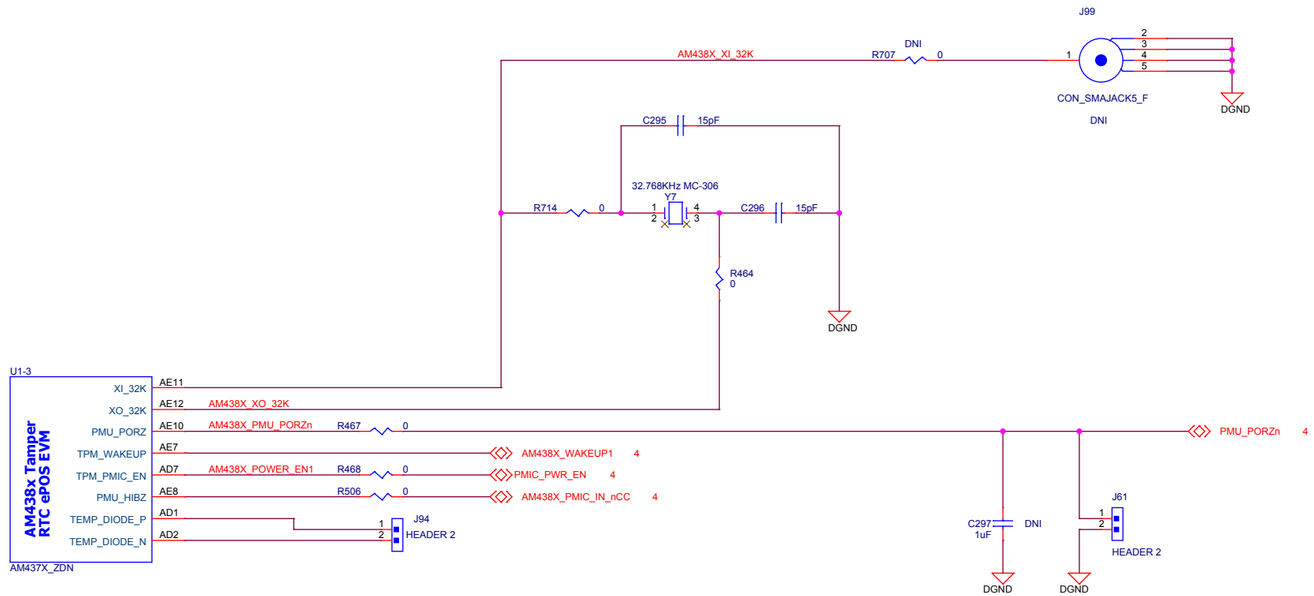

ARM MPU

Texas Instruments, Inc.
ARM MPU Business Unit
12500 TI Blvd
Dallas, TX 75243

Final

TEXAS INSTRUMENTS

TMDXEVM438X PROC038
Tamper Signals

Size	Document Number	Modified By:	Rev
C	am438x_ePOS_EVM_3k0007_rev1_4a.dsn	Mistral Team	1.4A

Date: Monday, March 06, 2017 Sheet: 23 of 31

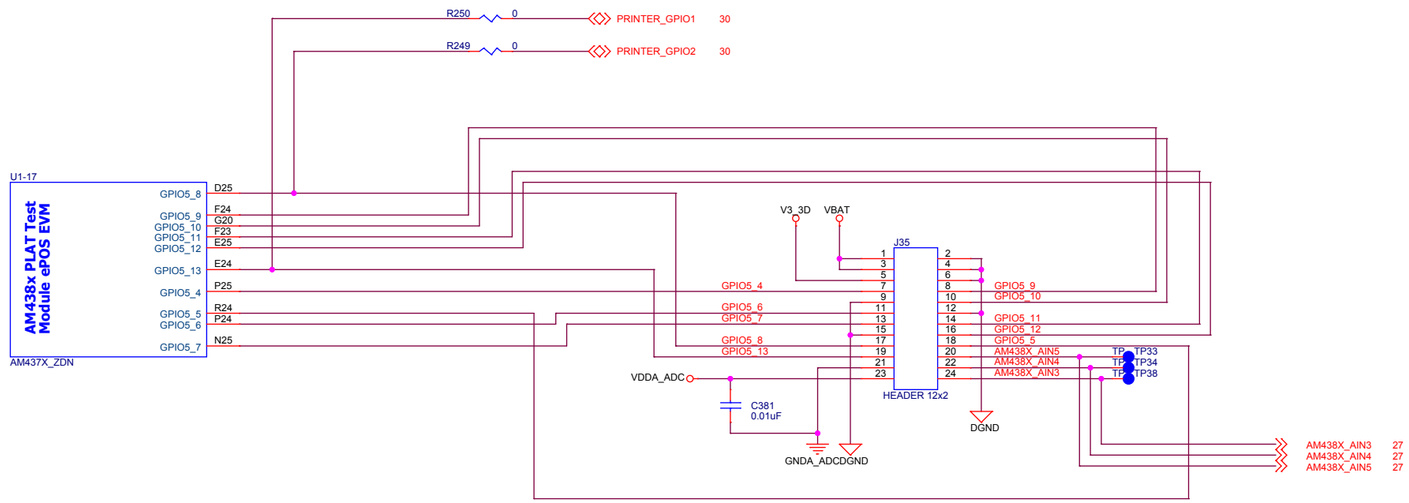

ARM MPU

Texas Instruments, Inc.
ARM MPU Business Unit
12500 TI Blvd
Dallas, TX 75243

Final

TEXAS INSTRUMENTS

TMDXEVM438X PROC038

PLAT Test Signals

Size	Document Number	Modified By:	Rev
C	am438x_ePOS_EVM_3k0007_rev1_4a.dsn	Mistral Team	1.4A

Date: Monday, March 06, 2017 Sheet: 24 of 31

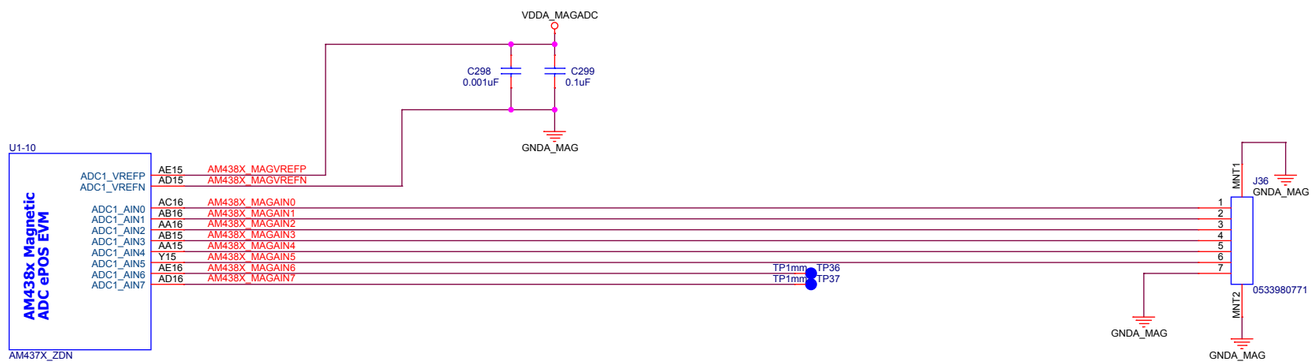

ARM MPU

Texas Instruments, Inc.

ARM MPU Business Unit
12500 TI Blvd
Dallas, TX 75243

Final

TEXAS INSTRUMENTS

TMDXEVM438X PROC038

Magnetic Swipe Reader

Size	Document Number	Modified By:	Rev
C	am438x_ePOS_EVM_3k0007_rev1_4a.dsn	Mistral Team	1.4A

Date: Monday, March 06, 2017 Sheet: 25 of 31

Key Pad - Top Side

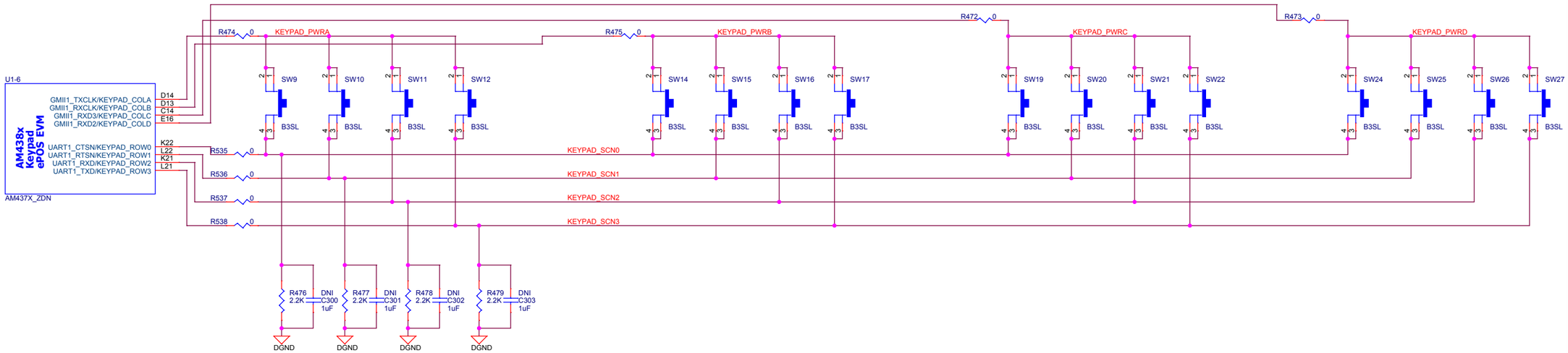

Key Pad - Bottom Side

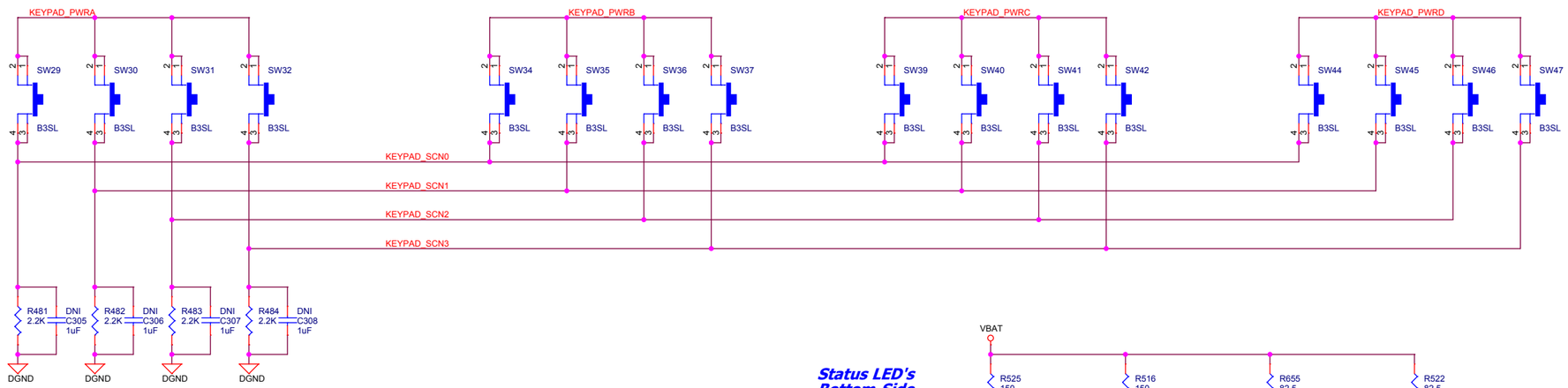

Status LED's Top Side

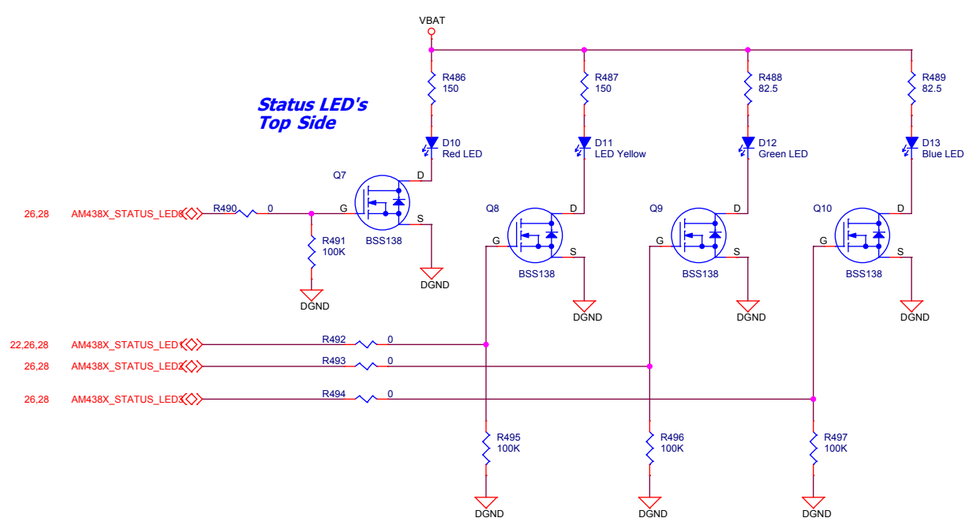

Status LED's Bottom Side

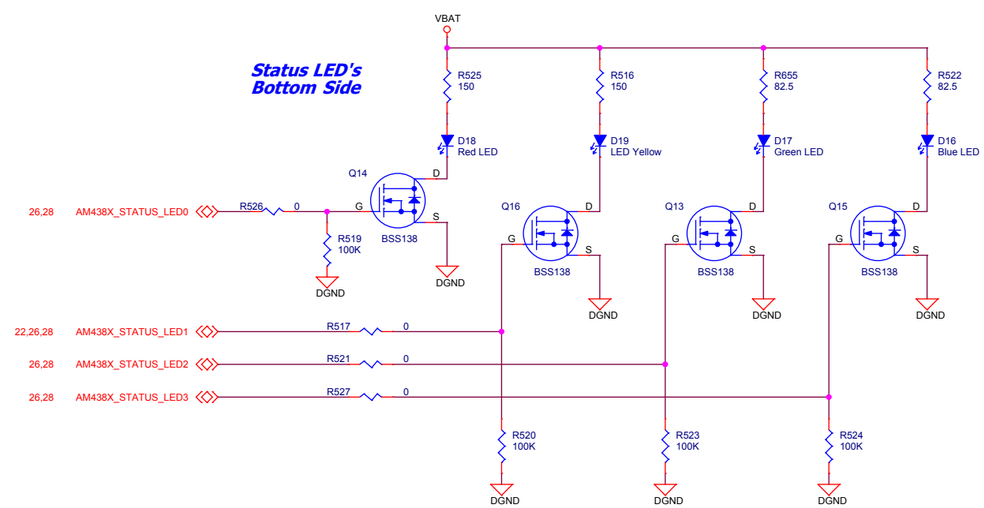

ARM MPU

Texas Instruments, Inc.
ARM MPU Business Unit
12500 TI Blvd
Dallas, TX 75243

Final

TEXAS INSTRUMENTS

TMDXEVM438X — PROC038
Keypad/Status LED's

Size	Document Number	Modified By:	Rev
C	am438x_ePOS_EVM_3k0007_rev1_4a.dsn	Mistral Team	1.4A

Date: Monday, March 06, 2017 — Sheet: 26 of 31

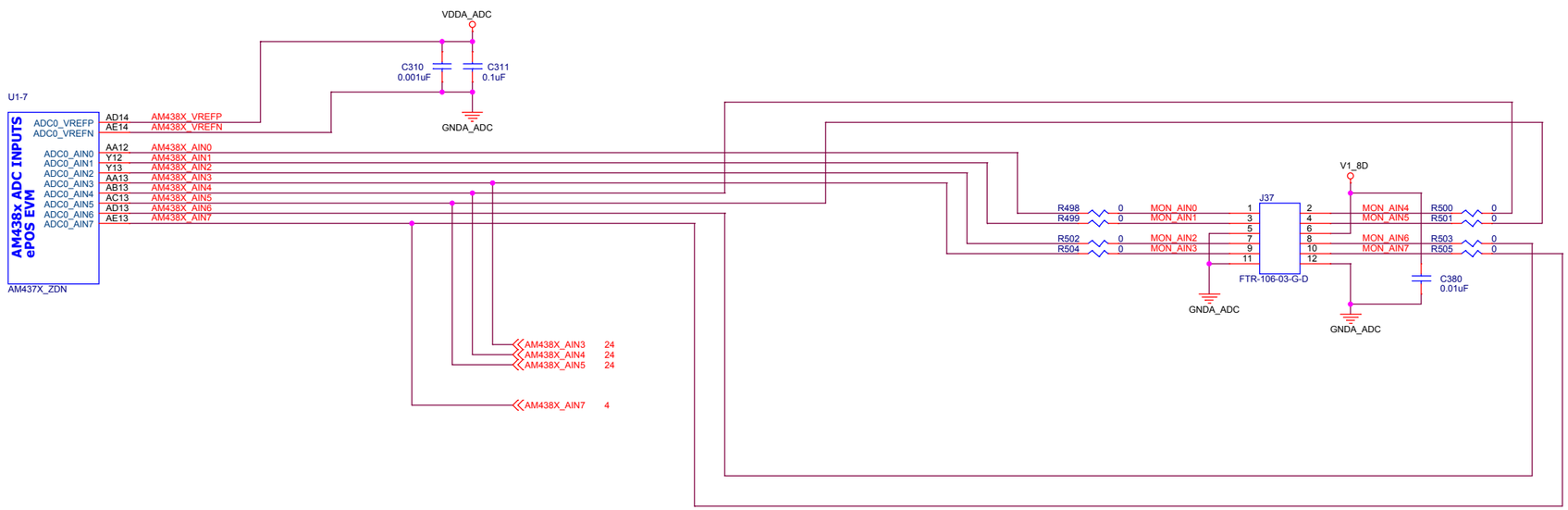

ARM MPU

Texas Instruments, Inc.
ARM MPU Business Unit
12500 TI Blvd
Dallas, TX 75243

Final

TEXAS INSTRUMENTS

TMDXEVM438X
ADC Inputs

PROC038

Size	Document Number	Modified By:	Rev
C	am438x_ePOS_EVM_3k0007_rev1_4a.dsn	Mistral Team	1.4A

Date: Monday, March 06, 2017 Sheet: 27 of 31

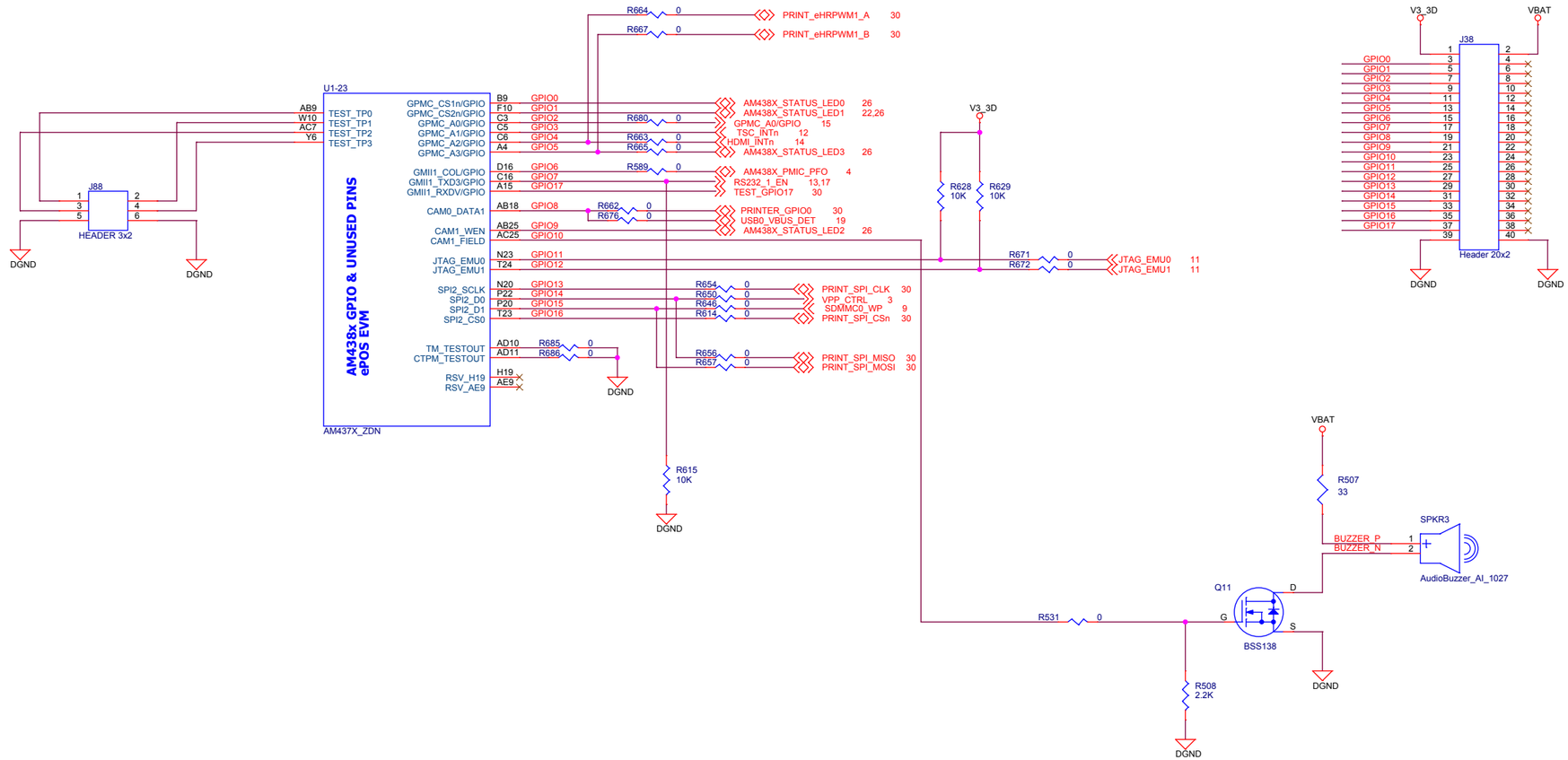

ARM MPU

Texas Instruments, Inc.
ARM MPU Business Unit
12500 TI Blvd
Dallas, TX 75243

Final

TEXAS INSTRUMENTS

TMDXEVM438X
GPIO

PROC038

Size	Document Number	Modified By:	Rev
C	am438x_ePOS_EVM_3k0007_rev1_4a.dsn	Mistral Team	1.4A

Date: Monday, March 06, 2017 Sheet: 28 of 31

POWER MONITORS

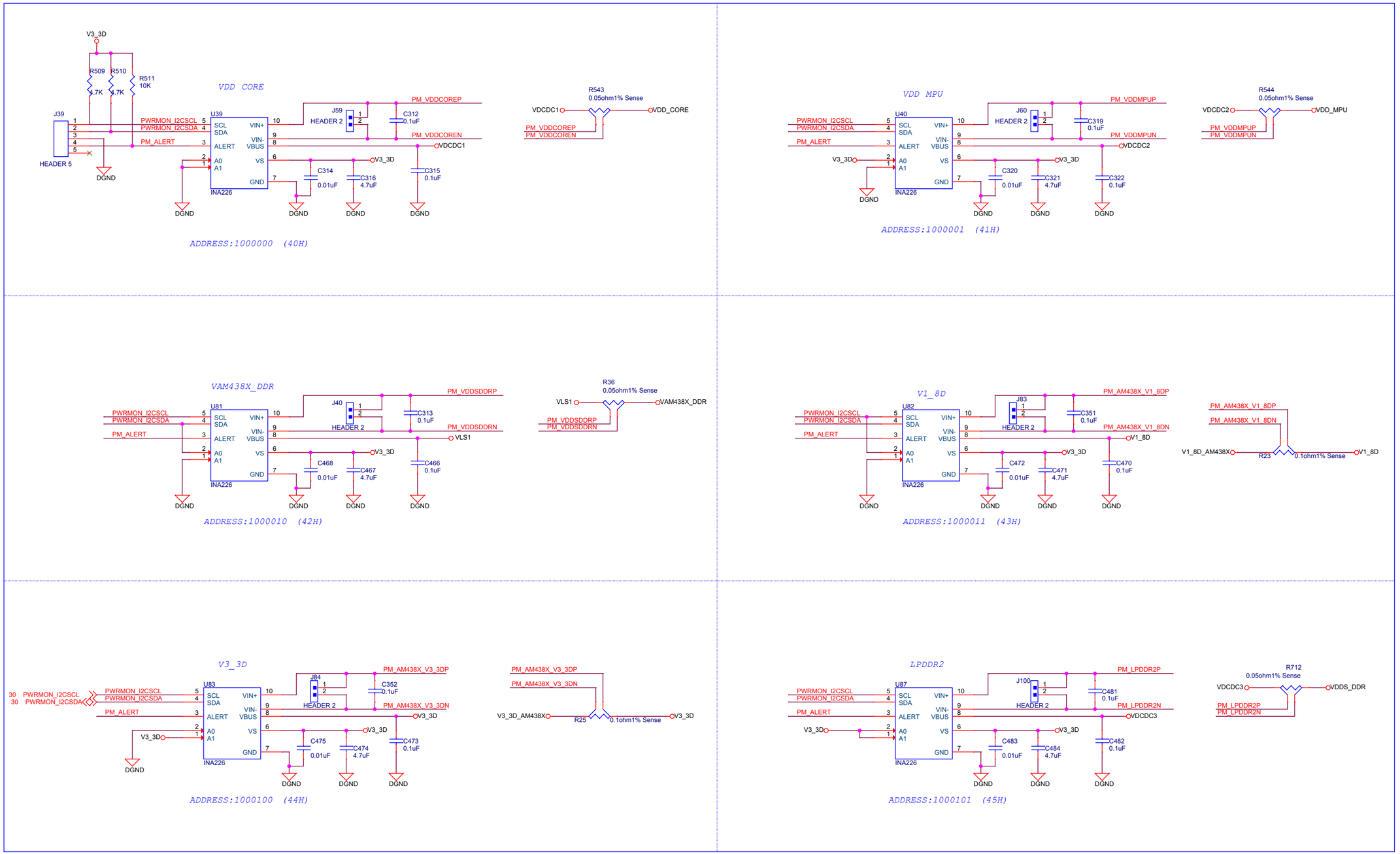

Note :- Put the Shut to J101 & J102 to connect the power monitor I2C lines to the processor I2C0 bus

ARM MPU

Texas Instruments, Inc.
ARM MPU Business Unit
12500 TI Blvd
Dallas, TX 75243

Final

TEXAS INSTRUMENTS

TMDXEVM438X PROC038

Power Monitor

Size	Document Number	Modified By:	Rev
C	am438x_ePOS_EVM_3k0007_rev1_4a.dsn	Mistral Team	1.4A

Date: Monday, March 06, 2017 Sheet: 29 of 31

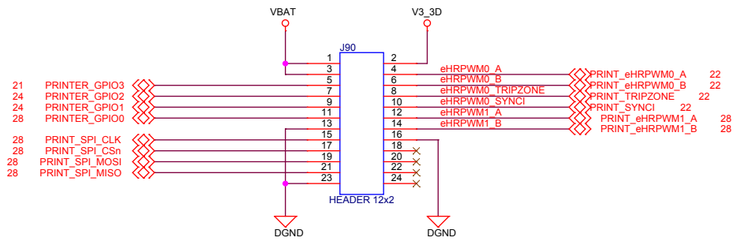

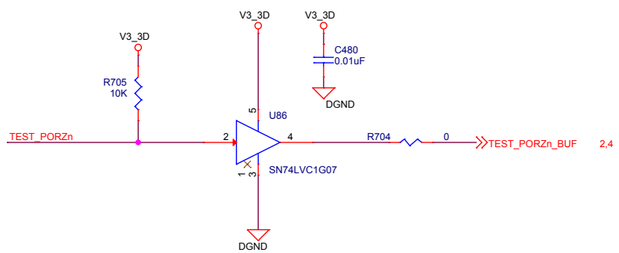

40-PIN AUTOMATION HEADER

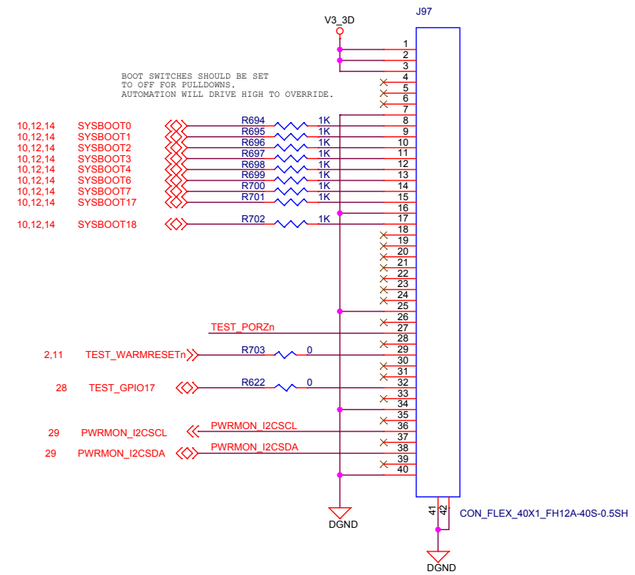

ARM MPU

Texas Instruments, Inc.
ARM MPU Business Unit
12500 TI Blvd
Dallas, TX 75243

Final

TEXAS INSTRUMENTS

TMDXEVM438X
Printer Connector

PROC038

Size	Document Number	Modified By:	Rev
C	am438x_ePOS_EVM_3k0007_rev1_4a.dsn	Mistral Team	1.4A

Date: Monday, March 06, 2017 Sheet: 30 of 31

HARDWARE SCHEMATICS

MOUNTING HOLES

MH1 — MH138NPL
MH2 — MH138NPL
MH3 — MH138NPL
MH4 — MH138NPL
MH5 — MH118NPL
MH6 — MH118NPL
MH7 — MH118NPL
MH8 — MH118NPL

STANDOFFs

LCD

M32 — Screw4-40_5/8in
M16 — Standoff4-40_round_5/8inlong
M8 — Rubber Feet
M37 — Screw4-40_1/4in
M33 — Screw4-40_5/8in
M17 — Standoff4-40_round_5/8inlong
M9 — Rubber Feet
M36 — Screw4-40_1/4in
M24 — Screw4-40_5/8in
M18 — Standoff4-40_round_5/8inlong
M10 — Rubber Feet
M22 — Screw4-40_1/4in
M25 — Screw4-40_5/8in
M19 — Standoff4-40_round_5/8inlong
M11 — Rubber Feet
M23 — Screw4-40_1/4in

M14 — Rubber Feet
M12 — Screw4-40_1/4in
M15 — Rubber Feet
M13 — Screw4-40_1/4in
M30 — Standoff4-40_round_5/8inlong
M20 — Screw4-40_1/4in
M31 — Standoff4-40_round_5/8inlong
M21 — Screw4-40_1/4in

MSR

M26 — Washer 4-40
M28 — Hex Nut 4-40
M34 — Screw4-40_1/4in
M27 — Washer 4-40
M29 — Hex Nut 4-40
M35 — Screw4-40_1/4in
M42 — Washer 4-40
M45 — Screw4-40_3/8in
M43 — Washer 4-40
M46 — Screw4-40_3/8in

M44 — Shunt0.1in
M6 — Shunt0.1in
M7 — Shunt0.1in

FIDUCIALS

FID1 FID2 FID3
FID4 FID5 FID6

Label_Assembly_Note
ZZ1
The boards and components must be baked before assembly

Label_Assembly_Note
ZZ2
Provide serial numbers to the assembled boards for identification

Label_Assembly_Note
ZZ3
Please carry out the cold points check verification and provide the report for each assembled board

Label_Assembly_Note
ZZ4
The assembled board are wrapped in ESD Covers(individual) and packed securely before shipment.

Label_Assembly_Note
ZZ5
All MSL components should be baked as per JEDEC standard

Label_Assembly_Note
ZZ6
PCB should be baked at 120 degree for 8 hours

Label_Assembly_Note
ZZ7
These assemblies must comply with workmanship standards IPC-A-610 Class 2, unless otherwise specified.

Label_Assembly_Note
ZZ8
These assemblies are ESD sensitive, ESD precautions shall be observed.

Label_Assembly_Note
ZZ9
These assemblies must be clean and free from flux and all contaminants. Use of no clean flux is not acceptable.

LOGOs & LABELs

PCB LOGO — Texas Intruments
PCB LOGO — For Evaluation only; not FCC approved for resale
PCB LOGO — RoHS Exempt

PCB1 — AM438x ePOS EVM Bare PCB
PCB2 — Camera Board Assembled PCB
A1 — LCD TFT 800x480 RGB Display with Capacitive Touch Screen — OSD070T1718-19TS
PCB3 — VPP Board Assembled PCB
PCB4 — Tamper Board Assembled PCB

Board Serial No.
PCB Label
Size: 0.55" x 0.314 "
LBL1

M38 — AM43xxEVM_7inLCDMountingBracket
M39 — AM43xxEVM_7inLCDMountingBracket

KIT CONTENTS

MicroSD CARD and Adapter

AF16GUD3-OEM
H1

328030004
H2

ETHERNET CABLE

N210-007-GY
H3

USB CABLE

0687840001
H4

UART CABLE

AK143-3
H5

ARM MPU

Texas Instruments, Inc.
ARM MPU Business Unit
12500 TI Blvd
Dallas, TX 75243

Final

TEXAS INSTRUMENTS

TMDXEVM438X — PROC038
Hardware Schematics

Size	Document Number	Modified By:	Rev
C	am438x_ePOS_EVM_3k0007_rev1_4a.dsn	Mistral Team	1.4A

Date: Monday, March 06, 2017 — Sheet: 31 of 31